ORDER NO. ARD-7707066C

Service Manual

Cassette Deck

RS-686DS-D

Ultra-Compact 3-Head Portable High-Fidelity
Stereo Cassette Deck with Monitor Head,
FG Servo DC Motor and Anti-Rolling Mechanism

DOLBY SYSTEM

RS-686 MECHANISM SERIES

Specifications (Catalog specifications for sales)

Power requirement:	AC; 110/125/220/240 V, 50/60 Hz with AC adaptor RP-997 (accessory included) DC; 9 V, six R-14 size dry cell batteries Power consumption; 12 W
Motor:	1-FG servo controlled DC motor
Track system:	4-track, 2-channel stereo recording and playback
Tape speed:	4.8 cm/s
Battery life:	Approx. 4 hours with alkaline batteries (continuous recording)
Wow and flutter:	0.07% (WRMS), ±0.18% (DIN)
Frequency response:	CrO_2 tape; 50 ~ 16,000 Hz ±3 dB 40 ~ 16,000 Hz (DIN) Normal tape; 50 ~ 14,000 Hz ±3 dB 40 ~ 14,000 Hz (DIN)
Signal-to-noise ratio:	Dolby NR in; 66 dB (above 5 kHz) Dolby NR out; 56 dB (signal level = max. recording level)
Fast forward and rewind time:	Approx. 80 seconds with C-60 cassette tape
Input:	MIC; sensitivity 0.25 mV/applicable microphone impedance 400Ω ~ 10 KΩ LINE; sensitivity 60 mV/input impedance 100 KΩ
Output:	LINE; output level 420 mV/load impedance 22 KΩ over HEADPHONE; output level 65 mV/load impedance 8Ω ~ 125Ω EARPHONE; output level 65 mV/load impedance 8Ω (monaural) Monitor speaker; output power 0.2 W (monaural)
Head:	3-head system 1-HPF head for record/playback 1-permalloy head for recording monitor 1-double-gap ferrite head for erasure
Dimensions:	24.3 cm (W) × 7.7 cm (H) × 20.0 cm (D)
Weight:	2.8 kg (without batteries)

Specifications are subject to change without notice.

National Technics

Matsushita Electric Trading Co., Ltd.
P.O. Box 288, Central Osaka Japan

LOCATION OF CONTROLS AND COMPONENTS

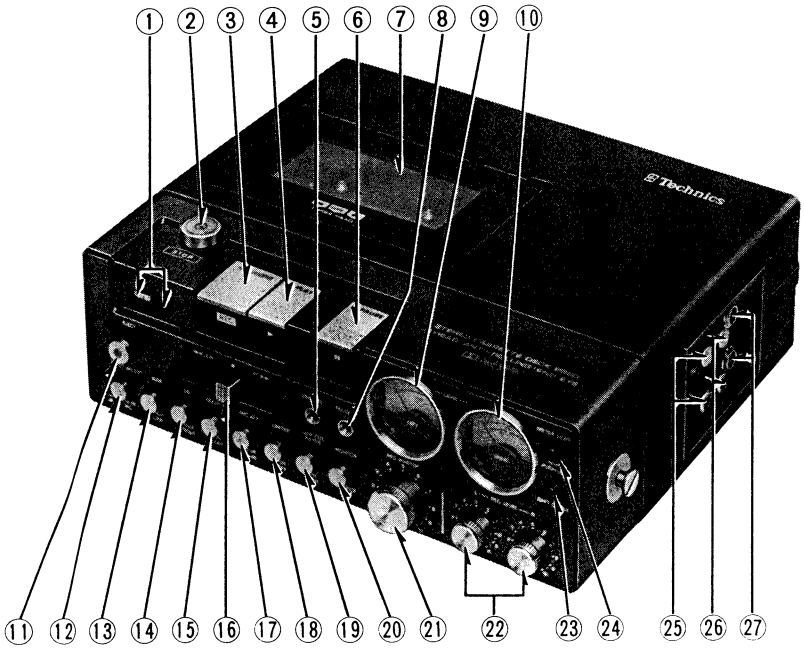

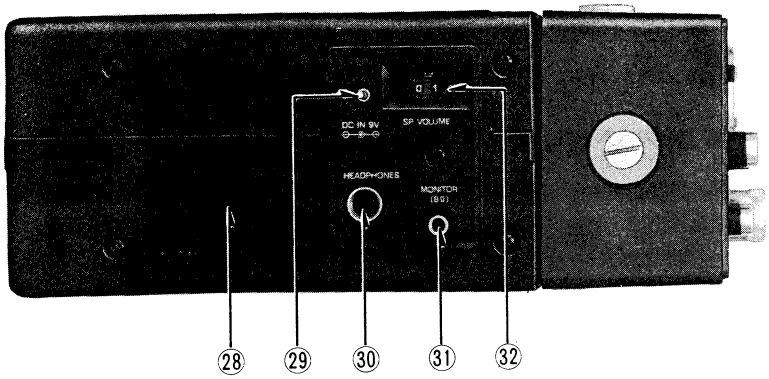

Fig. 1

① Tape counter and reset button
② Stop button
③ Record button
④ Playback button
⑤ Tape-end indicator
⑥ Pause button
⑦ Cassette compartment cover
⑧ Recording indicator lamp
⑨ Peak-check/level meter
⑩ Peak-check/level/battery-check meter
⑪ Eject button
⑫ Input selector
⑬ Bias selector
⑭ Equalization selector
⑮ Dolby noise-reduction switch
⑯ Rewind/fast forward lever
⑰ Microphone attenuator switch
⑱ Limiter switch
⑲ Low-cut filter switch
⑳ Monitor switch
㉑ Master record level control
㉒ Record level control
㉓ Battery-check button
㉔ Meter light button
㉕ Line output jacks
㉖ Microphone jack
㉗ Line input jacks
㉘ Built-in speaker
㉙ External DC input jack
㉚ Headphone jack
㉛ Monitor jack
㉜ Speaker volume control

BLOCK DIAGRAM OF ELECTRICAL CIRCUITS

RECORD MODE

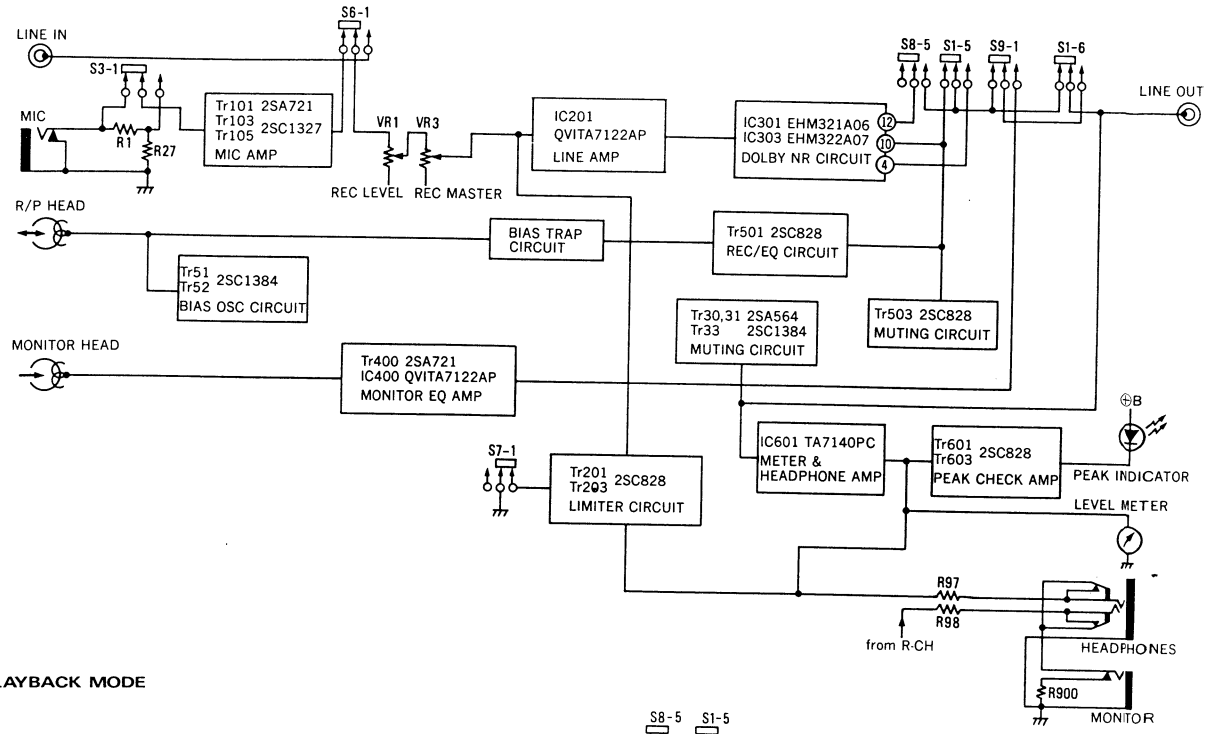

PLAYBACK MODE

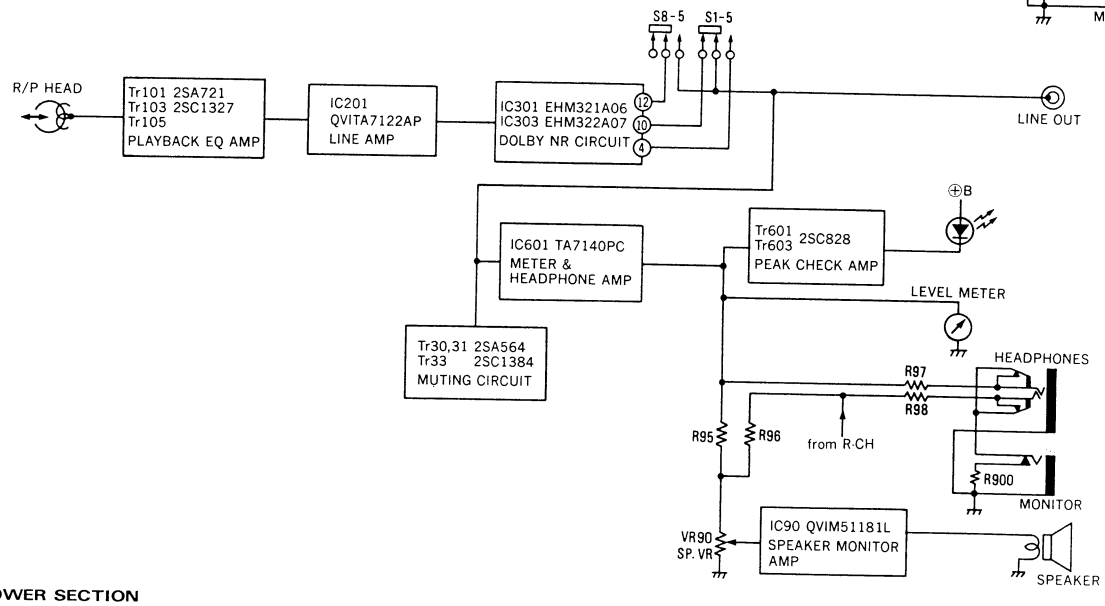

POWER SECTION

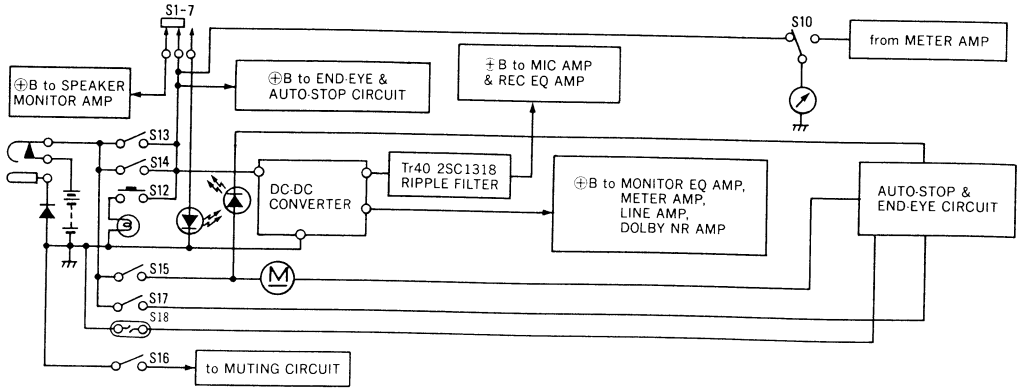

DISASSEMBLY INSTRUCTIONS

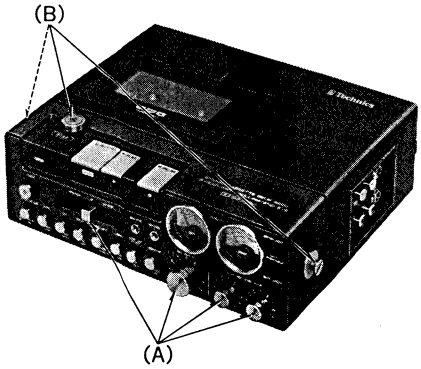

Fig. 2

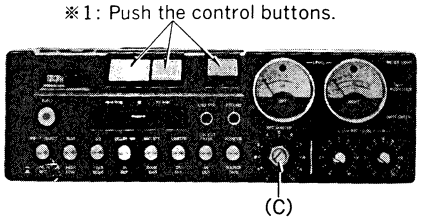

Fig. 3

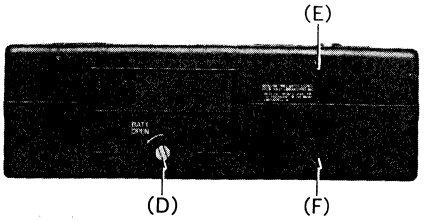

Fig. 4

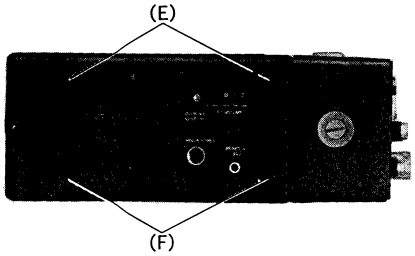

Fig. 5

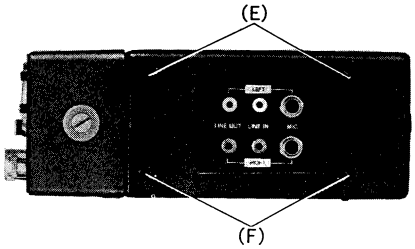

Fig. 6

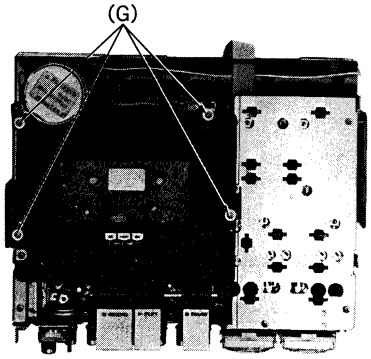

Fig. 7

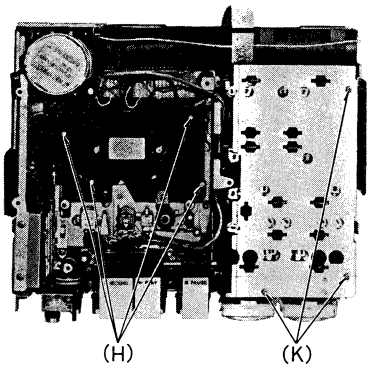

Fig. 8

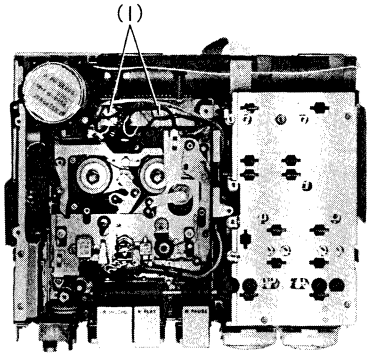

Fig. 9

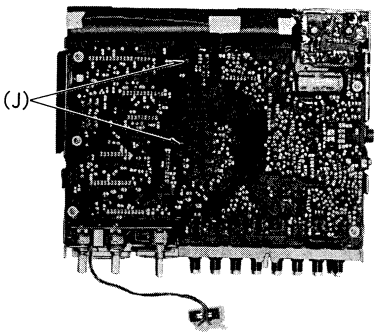

Fig. 10

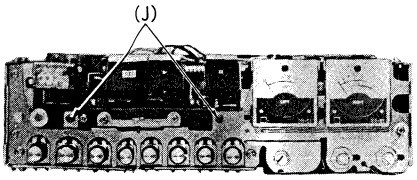

Fig. 11

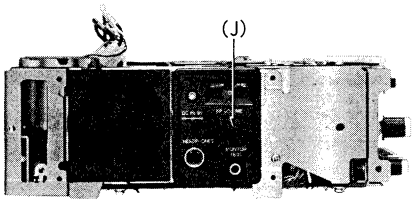

Fig. 12

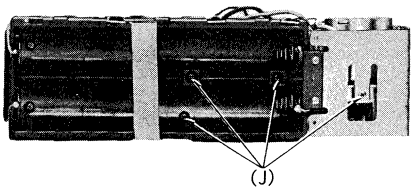

Fig. 13

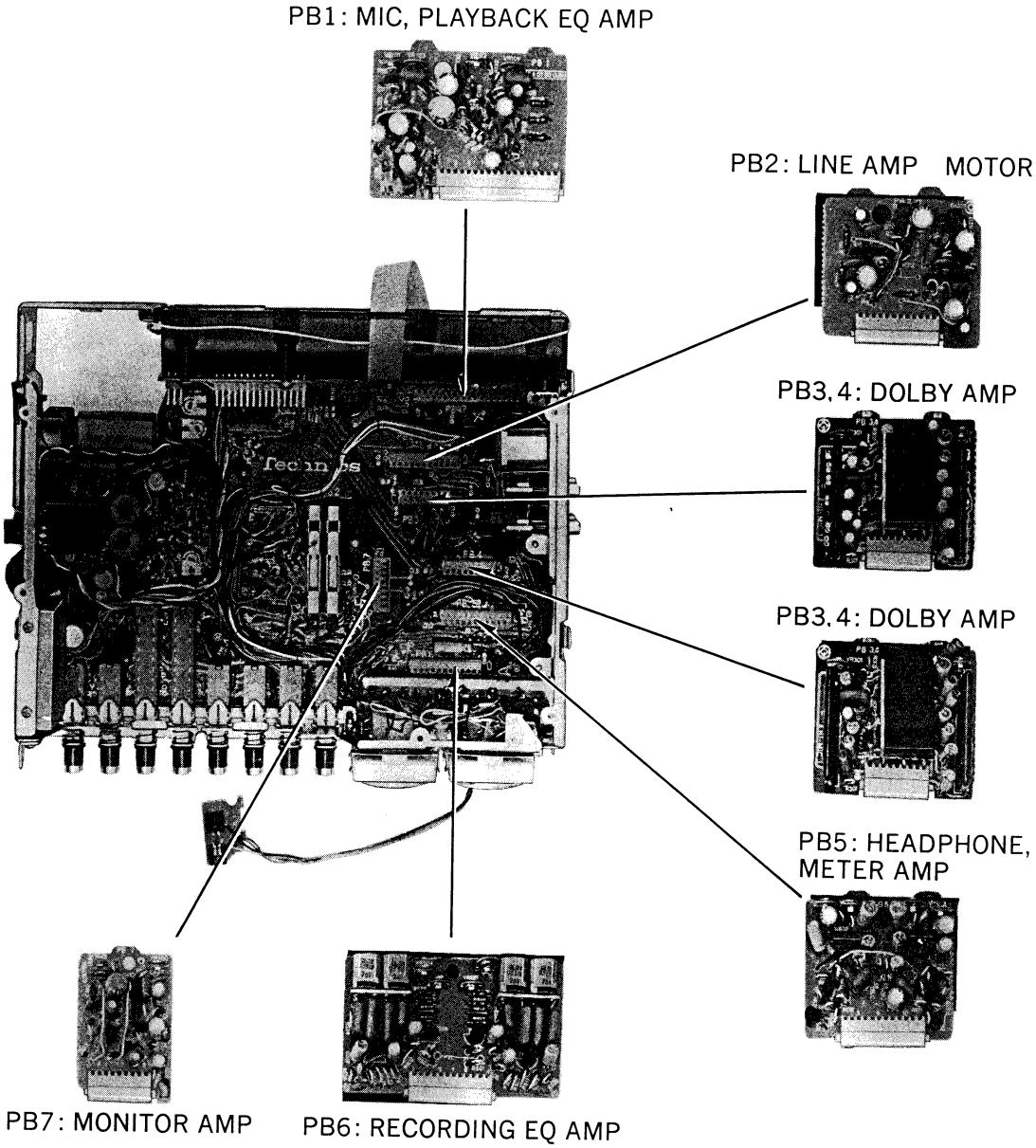

Fig. 14

Procedure	To remove ——.	Remove ——.	Shown in fig. ——
1	Front panel (※1 ··· See fig. 3)	4 knobs ····· (A) 3 screws ····· (B) Nut ····· (C)	2 2 3
2	Battery lid	Screw ····· (D)	4
3	Top case	5 screws ····· (E)	4, 5, 6
3	Bottom case	5 screws ····· (F)	4, 5, 6
4	Cassette cover	4 screws ····· (G)	7
5	Mechanism	4 screws ····· (H) 2 connectors ····· (I) 9 screws ····· (J)	8 9 10, 11, 12, 13
5	P.C.B. holding plate	3 screws ····· (K)	8

ADJUSTMENTS

Before measuring and adjusting "Overall frequency response", "Overall distortion" and "Overall S/N ratio", confirm that the characteristics of 5 items below are within standard which have much relation to or influence on electrical performances above.

1. Head azimuth adjustment. 2. Bias current. 3. Playback gain. 4. Overall gain.
5. Playback frequency response.

I. TEST INSTRUMENTS

1. Prepare test instruments which are equivalent in accuracy to those shown below.
2. The test instruments should be inspected and corrected by specialists once every 6 months, because a long period of use without maintenance may increase errors in indication.
3. Warm-up the test instruments for 30 minutes and the set to be measured for 10 minutes before taking the measurements. If not, there may arise an error or difference between the initial value and the stabilized value measured after "aging".
4. Specifications of test instruments.

---

(1) Audio frequency oscillator

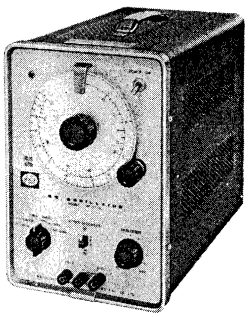

a. Oscillation frequency:	5 Hz ~ 500 kHz (5 ranges)
b. Frequency tolerance:	±(3% +1 Hz)
c. Sine wave	
* Output voltage (at 25°C):	5 Vrms ±10% (without load)
	2.5 Vrms ±10% (with 600Ω load)
* Output frequency response:	Within ±0.2 dB, 20 Hz ~ 20 kHz
	Within ±0.5 dB, 5 Hz ~ 500 kHz
* Distortion factor:	Not more than 0.05%, 200 Hz ~ 20 kHz
	Not more than 0.5%, 5 Hz ~ 500 kHz
* Output impedance:	600Ω unbalanced, within ±15%
* Output attenuator:	0 dB, 20 dB, error; within ±0.2 dB
d. Temperature in use of set:	Temperature = 0 ~ 40°C, humidity = 90% or less

---

(2) Automatic-stop distortion meter (with vacuum tube voltmeter)

A. Distortion factor measurement	
a. Frequency (fundamental wave):	400 Hz, 1 kHz ±10%
b. Measurement:	0.1 ~ 100% (6 ranges)
c. Input:	50 mV ~ 50 V
d. Fundamental wave attenuation:	60 dB or more
B. Level measurement	
a. Measurement:	1 mV (−60 dB) ~ 30 V (30 dB) (9 ranges)
b. Frequency response (1 kHz basis):	20 Hz ~ 100 kHz ±0.3 dB
c. Input impedance:	1 MΩ ±10%, less than 50 pF
d. Error in indicated value:	Within ±3% at 1 kHz
C. Output terminal	
a. Frequency response:	10 Hz ~ 100 kHz ±1 dB
	100 kHz ~ 1 MHz ±3 dB
b. Output voltage:	1 Vrms ±10% (1 kHz sine wave)

(3) Attenuator

a. Input impedance:	600Ω unbalanced
b. Maximum attenuation:	121 dB
c. Minimum attenuation:	0.1 dB

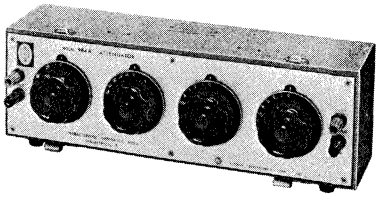

(4) Oscilloscope

a. Cathode ray tube:	Effective ranges 8×8 cm
b. Vertical axis	
* Input sensitivity:	30 mV～30 V/cm
* Frequency band:	DC～2 MHz
* Transient time:	180 ns.
* Input impedance:	1 MΩ, 35 pF
c. Horizontal axis	
* Tuning range:	30 Hz～2 MHz
* Sweep time:	1μs～100 ms/cm
* External sweep:	1 Vp-p/cm or more

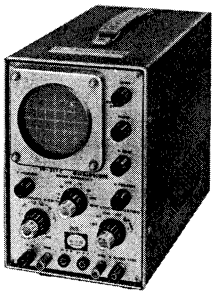

(5) Digital electronic counter

a. Number of figure:	4 (decimal system)
b. Input sensitivity:	100 mVrms
c. Input impedance:	1 MΩ, 40 pF
d. Frequency measurement range:	10 Hz～100 kHz
e. Counting time:	0.1 s, 1 s, 10 s

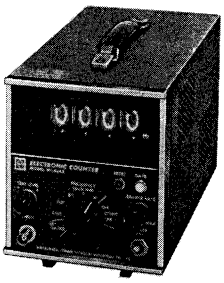

(6) Wow meter

a. Measured center frequency range:	3 kHz ±4%
b. Input level range:	30 mV～3 V
c. Input impedance:	About 50 KΩ unbalanced
d. Measurement:	0.01～3% (5 ranges)
e. Indicator error:	Maximum error in indicated value ±5% in each range.
f. Frequency response:	Conforming to weighting curve characteristics (WRMS), JIS C5551. Flat characteristics (RMS) 0.5～200 Hz, within −3 dB (4 Hz basis)
g. Meter indication system:	Effective value indication, conforming to JIS C5551.
h. Meter response characteristic:	About 5～7 sec.
i. Oscillation frequency:	3 frequencies (3 kHz, 3 kHz ±3%)
j. Temperature range:	0～40°C

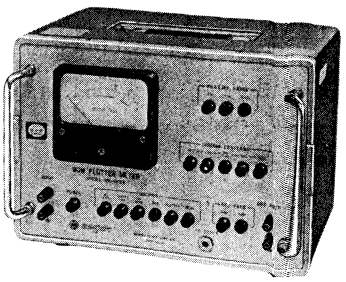

II. MEASUREMENT CONDITIONS

1. Standard measurement conditions
   * Ambient temperature: 10～30°C (50～86°F)
   * Ambient humidity: 30～90% RH
   * Power voltage accuracy: ±3%
2. Position of tape recorder
   * When measuring, place the unit under test in a horizontal position.
3. Oscillator output voltage adjustment
   * Connect the equipments as shown in the following and adjust the oscillator output control knob for 1 V (f = 1 kHz) through the attenuator while keeping the attenuator at 0 dB.
   * When supplying a signal to the tape recorder amplifier, adjust the input level using the attenuator.

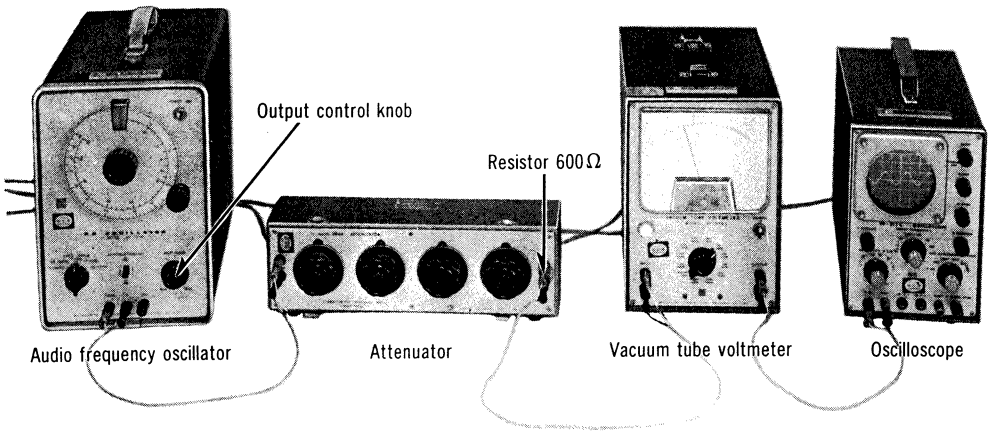

III. TEST TAPE

Test tape life

The more frequently the test tape is used, the more the tape characteristics will deteriorate (e.g. lowering of recorded level, worsening of frequency response particularly in high-frequency range, and an increase in wow due to tape elongation) until measured values become unreliable. Even in such a case when a tape is not used, but stored, for a long period of time, tape shows deterioration in performance because of self damagenetization due to storage conditions, etc.
Please refer to the tape life specification and use care not to use a tape longer than its rated life when servicing.

Frequence of use: Not more than 20 times for each tape length.
Storage period: Not more than 6 months.

Test tape

PARTS NO.	PARTS NAME	SPECIFICATIONS	REMARKS
C-FH	Standard recording level and frequency response tape	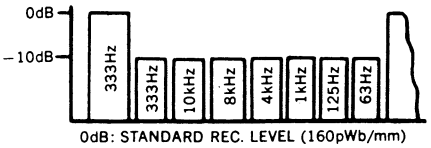	5 times repetitive recording Tape speed: 1-7/8 ips. (4.8 cm/s) Full track (10 min.)
C-WAT	Wow and tape speed tape	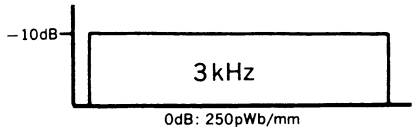	Tape speed: 1-7/8 ips. (4.8 cm/s) Full track (45 min.)
C-AA	Azimuth tape	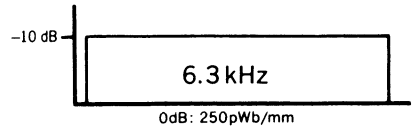	Tape speed: 1-7/8 ips. (4.8 cm/s) Full track (15 min.)
C-RA	Reference blank tape (Normal)		Unrecorded tape (20 min.)
C-RF	Reference blank tape (CrO_2)		Unrecorded tape (20 min.)

IV. MEASUREMENT & ADJUSTMENT METHOD

NOTE:

1. Make sure heads are clean.
2. Make sure capstan and pressure roller are clean.
3. Judgeable room temperature: 20±5°C (68±9°F)
4. Input select switch: LINE IN
5. Bias select switch: LOW
6. Equalizer select switch: 120μS
7. Dolby NR switch: OUT
8. Microphone attenuator switch: 0 dB
9. Limiter switch: OFF
10. Low-cut filter switch: OUT
11. Monitor switch: TAPE
12. Record master control: Maximum
13. Record level control: Maximum

ITEM	MEASUREMENT & ADJUSTMENT	REMARKS
Pressure of pressure roller Equipment: * Tension gauge (max. 500 gr) 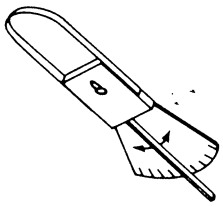	1. Place UNIT into playback mode. 2. Hook the tension gauge to pressure roller shaft top (A) and pull it in the direction of the arrow (B) as shown in fig. 15. 3. Measure the tension at the moment when the pressure roller moves away from the capstan. **Standard value: 400±50 gr** **Adjustment method** Adjust by bending the (C) part of the pressure roller spring.	* Playback mode 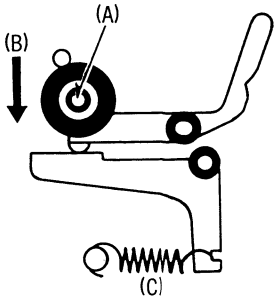 **Fig. 15**
Takeup tension Equipment: * Cassette torque meter (SRK-CT or RP8063)	1. Mount cassette torque meter on UNIT. 2. Place UNIT into playback mode and read takeup torque. 3. Measure several times and determine the mean value. **Standard value: 55±15 gr-cm**	* Playback mode
Head azimuth adjustment Equipment: * VTVM * Oscilloscope * Test tape (azimuth) ··· C-AA	**Record/playback head adjustment** 1. Test equipment connection is shown below. 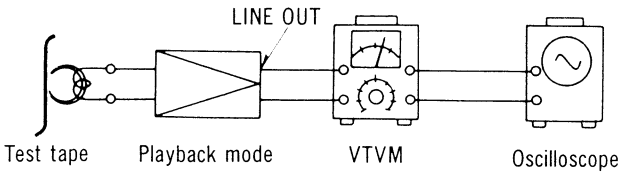 **Fig. 16** 2. Playback azimuth tape (C-AA 6.3 kHz). 3. Adjust record/playback head angle adjustment screw (D) in fig. 17 so that output level at LINE OUT becomes maximum. 4. Measure both channels, and adjust levels for equal output. 5. After adjustment lock head adjustment screw with lacquer.	* Playback mode 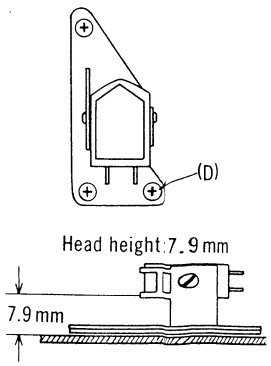 **Fig. 17**
Equipment: * VTVM * Oscilloscope * AF oscillator * ATT * Test tape ··· C-RA2 (reference blank tape)	**Monitor head adjustment** 1. Test equipment connection is shown in fig. 23. 2. Set the monitor switch to TAPE and supply 1 kHz signal (−24 dB) to LINE IN. 3. Using test tape (C-RA2). 4. Place UNIT into record mode and measure the monitor output level at LINE OUT jack on VTVM. 5. Adjust head angle adjustment screw (E) in fig. 18 so that output level at LINE OUT becomes maximum. 6. Measure both channels, and adjust levels for equal output. 7. After adjustment lock head adjustment screw with lacquer.	* Record mode 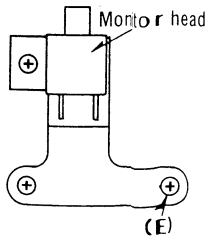 **Fig. 18**

ITEM	MEASUREMENT & ADJUSTMENT	REMARKS
Tape speed Equipment: * Digital electronic counter or frequency counter (RP8067) * Test tape ··· C-WAT	**Tape speed accuracy** 1. Test equipment connection is shown below. 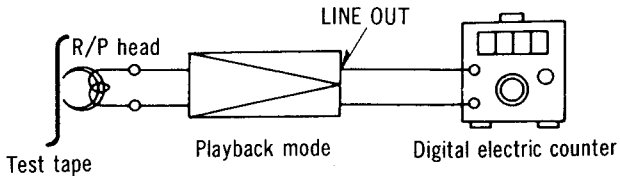 **Fig. 19** 2. Playback test tape (C-WAT 3,000 Hz), and supply playback signal to frequency counter. 3. Measure this frequency. 4. On the basis of 3,000 Hz determine value by following formula: $\text{Tape speed accuracy} = \frac{f-3{,}000}{3{,}000} \times 100(\%)$ where, f = measured value 5. Take measurement at middle section of tape. **Standard value: ±0.5%** **Adjustment method** 1. Playback the test tape (middle). 2. Adjust the tape speed adjustment VR shown in fig. 32 so that frequency becomes 3.000 Hz. **Tape speed fluctuation** Make measurements in same manner as above (beginning middle and end of tape), and determine difference between maximum and minimum values and calculate as follows: $\text{Tape speed fluctuation} = \frac{f_1-f_2}{3{,}000} \times 100(\%)$ f_1 = maximum value f_2 = minimum value **Standard value: 0.5%**	* Playback mode
Wow and flutter Equipment: * Wow meter * Test tape ··· C-WAT	1. Test equipment connection is shown below. 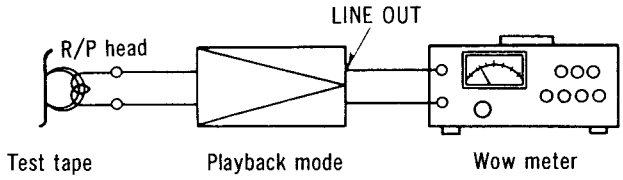 **Fig. 20** 2. Use wow test tape (3,000 Hz) and measure the playback signal on wow meter. 3. Wow and flutter is expressed in percentage and that measurement can be weighted by JIS network (WRMS). 4. Measure at middle section of test tape. **Standard value: 0.08% (WRMS)**	* Playback mode

ITEM	MEASUREMENT & ADJUSTMENT	REMARKS
Playback frequency response Equipment: * VTVM * Oscilloscope * Test tape··· C-FH	1. Test equipment connection is as same as "Head azimuth adjustment" but use the test tape (C-FH) instead of head azimuth tape (See fig. 16). 2. Place UNIT into playback mode. 3. Playback frequency response test tape (C-FH). 4. Measure output level at 10 kHz, 8 kHz, 4 kHz, 1 kHz, 125 Hz and 63 Hz and compare each output level with standard frequency 333 Hz, at LINE OUT. 5. Make measurement for both channels. 6. Make sure that the measured value is within the range specified in the frequency response chart. **Playback frequency response chart** 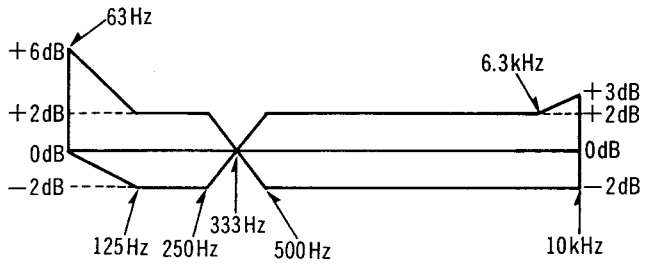 **Fig. 21** 7. If measured value is not in standard, adjust VR101 (L-CH), VR102 (R-CH) (See fig. 32).	* Playback mode
Playback gain Equipment: * VTVM * Oscilloscope * Test tape··· C-FH	1. Test equipment connection is shown in fig. 16. 2. Playback standard recording level portion on test tape (C-FH 333 Hz), and using VTVM measure the output level at LINE OUT jack. 3. Make measurement for both channels. **Standard value: 0.42(−7 dB)±0.05 V** **Adjustment method** 1. If measured value is not in standard, adjust VR103 (L-CH), VR104 (R-CH) (See fig. 32). 2. After adjustment, check "Playback frequency response" again.	* Playback mode
Playback S/N ratio Equipment: * VTVM * Oscilloscope * Test tape··· C-FH * Empty cassette	1. Test equipment connection is shown in fig. 16. 2. Playback standard recording level test tape (C-FH 333 Hz) and read output level on VTVM. Refer to "Playback gain adjustment". 3. Place UNIT into pause mode. 4. Measure noise level at this time using VTVM, and determine ratio of this level to test tape output signal voltage (333 Hz). **Standard value: Greater than 45 dB** An example calculation is shown below. A: Es = playback output signal voltage of test tape (333 Hz) B: En = playback output noise level $\text{S/N ratio} = \frac{Es}{En} = \frac{0.42\,V}{2.35\,mV} = 140$ $20 \log_{10} 178 = 45\,dB$ $\text{S/N ratio} = Es(dB) - En(dB) = -7 - (-52) = 45\,dB$ $Es = 0.42\,V\ (-7\,dB)$ $En = 2.35\,mV\ (-52\,dB)$	* Playback mode

ITEM	MEASUREMENT & ADJUSTMENT	REMARKS
Bias leak Equipment: * VTVM * Oscilloscope	1. Test equipment connection is shown below. 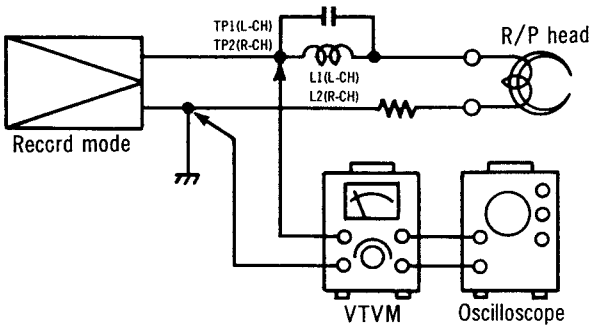 **Fig. 22** 2. Place UNIT into record mode. 3. Adjust trap coil L1 (L-CH), L2 (R-CH), so that measured value become minimum. 4. Take adjustment for both channels.	* Record mode
Bias current Equipment: * VTVM * Oscilloscope * AF oscillator * ATT	1. Test equipment connection is shown below. 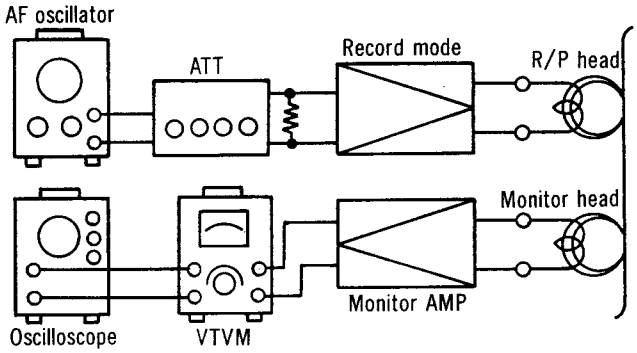 **Fig. 23** 2. Supply 1 kHz signal (−24 dB) from AF oscillator, through ATT, to LINE IN. 3. Place UNIT into record mode and measure the monitor level at LINE OUT jack on VTVM. 4. Adjust VR51 (L-CH) and VR52 (R-CH) so that measured values become 0.5 dB lower than maximum level.	* Record mode * Standard bias current Normal ····· 180 mA CrO_2 ····· 210 mA
Erase current Equipment: * VTVM * Oscilloscope * Resistor (1Ω)	1. Connect 1Ω resistor between ground side terminal of erase head and ground lead wire removed (See fig. 24A). 2. Connect VTVM to both ends of 1Ω resistor. 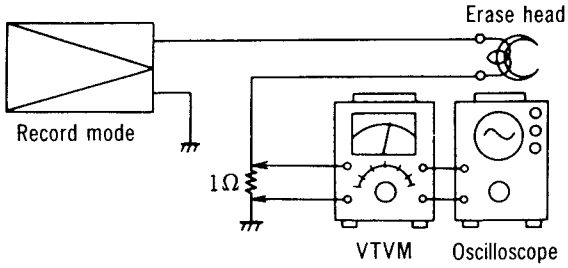 **Fig. 24B**	* Record mode 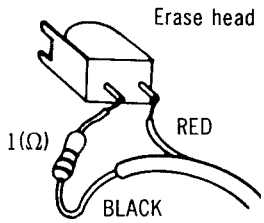 **Fig. 24A**

ITEM	MEASUREMENT & ADJUSTMENT	REMARKS
	3. Place UNIT into record mode and, measure voltage across the 1Ω resistor. 4. Determine erase current with the following formula: $\text{Erase current (A)} = \frac{\text{Voltage across 1}\Omega\text{ resistor (V)}}{1\,(\Omega)}$ **Standard value: 90±20mA (Normal)** **110±20mA (CrO_2)**	
Overall gain Equipment: * AF oscillator * VTVM * ATT * Oscilloscope * Test tape··· C-RA for Normal (reference blank tape)	1. Test equipment connection is shown in fig. 25. 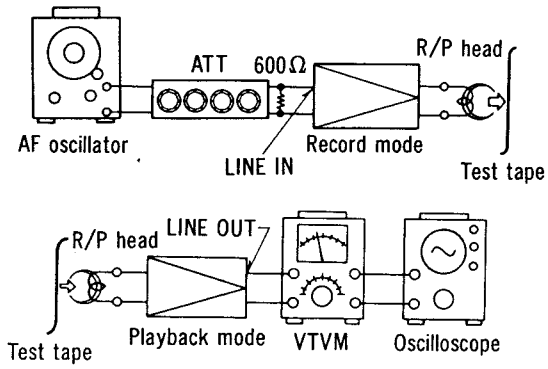 **Fig. 25** 2. Place UNIT into record mode, and equalizer selector to 120μS, bias selector to LOW (for normal tape) and monitor switch to SOURCE. 3. Supply 1kHz signal (−24dB) from AF oscillator, through ATT, to LINE IN. 4. Adjust ATT until source monitor level at LINE OUT becomes 0.42V (−7dB). 5. Using test tape (C-RA), make recording. 6. Playback recorded tape, and make sure the value at LINE OUT on VTVM becomes 0.42V. 7. If measured value is not 0.42V, adjust VR501 (L-CH), VR502 (R-CH) (See fig. 32). 8. Repeat from step (2). 9. Change the equalizer selector to 70μS and bias selector to HIGH (for CrO_2 tape). 10. Using test tape (C-RF) and measure as same as manner above. 11. If measured value is not 0.42V, adjust VR503 (L-CH), VR504 (R-CH) (See fig. 32). **Adjustment of the recording monitor level** 1. Set the monitor switch to SOURCE and supply 1kHz signal (−24dB) to LINE IN. 2. Place UNIT into record mode and adjust ATT until source monitor level at LINE OUT becomes 0.42V (−7dB). 3. Then, change the monitor switch to TAPE, and measure the recording monitor level at LINE OUT on VTVM. 4. If measured value is not 0.42V, adjust VR401.	* Record/playback mode * Record master and record level control ····· MAX * Input selector ····· LINE IN * Standard input level: MIC ····· −72±3dB LINE IN ··· −24±3dB * Monitor switch ·· SOURCE

ITEM	MEASUREMENT & ADJUSTMENT	REMARKS
Level meter Equipment: * VTVM * Oscilloscope * AF oscillator * ATT	1. Supply 1 kHz signal (−24 dB) from AF oscillator, through ATT, to LINE IN jack. 2. Place UNIT into record mode. 3. Set the monitor switch to SOURCE. 4. Adjust ATT until source monitor level at LINE OUT becomes 0.42 V. 5. Adjust VR601 (L-CH), VR602 (R-CH) so that level meter indicates 0 dB (See adjustment parts location on page 16). **Peak indicator adjustment** 6. Adjust ATT so that input level become 6 dB greater than the value in step (4) above. 7. Check whether the peak indicators on level meter illuminate. 8. Then, adjust ATT so that input level become 5 dB greater than the value in step (4) above. 9. Check whether the peak indicators on level meter do not illuminate. 10. If operation of peak indicator are not correct, adjust VR603 (L-CH), VR604 (R-CH).	* Record mode * Record master and record level control ····· MAX
Overall distortion Equipment: * Distortion meter * AF oscillator * ATT * Oscilloscope * Test tape ··· C-RA (reference blank tape) C-RA for Normal C-RF for CrO_2	1. Test equipment connection is shown in fig. 26. 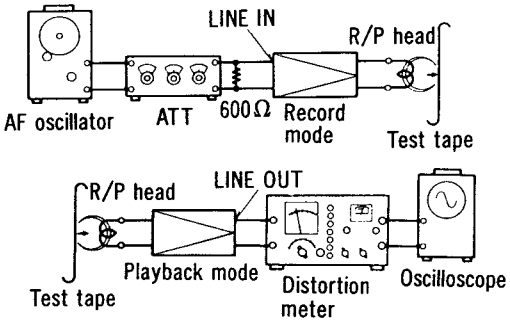 **Fig. 26** 2. Supply 1 kHz signal to LINE IN and adjust ATT so that output level at LINE OUT indicates 0.42 V (−7 dB). 3. Make recording. 4. Playback and measure distortion factor of output signal. 5. When the distortion factor does not satisfy the standard, check the bias current. When the bias current is lower than standard, distortion will increase. Care should be exercised in the adjustment because the bias curent also has an influence on the overall frequency response. Refer to "The overall frequency response" and "The bias current adjustment". **Standard value: Less than 2.3% (Normal)** **Less than 3.2% (CrO_2)**	* Record master and record level control ····· MAX * Input selector ····· LINE IN
Overall frequency response Equipment: * VTVM * AF oscillator * ATT * Test tape ··· C-RA (reference blank tape) C-RA for Normal C-RF for CrO_2	**Note:** Before measuring and adjusting, make sure of the playback frequency response (For the method of measurement, please refer to the playback frequency response). 1. Test equipment connection is shown in fig. 25. 2. Load reference blank test tape and place UNIT into record mode. 3. Supply 1 kHz signal from AF oscillator, through ATT, to LINE IN. 4. Adjust ATT so that input level is −20 dB below standard recording level (standard recording level = 0 VU). 5. At this time, LINE OUT level indicates 0.042 V.	* Record/playback mode * Record master and record level control ····· MAX * Use test tape ····· C-RA * Input selector ····· LINE IN

ITEM	MEASUREMENT & ADJUSTMENT	REMARKS
	6. Record each frequency 50 Hz, 100 Hz, 200 Hz, 700 Hz, 1 kHz, 1.5 kHz, 2 kHz, 4 kHz and 11 kHz (12 kHz for CrO_2) at the same level. 7. Playback and express in dB the difference between playback output level of each frequency based on playback output level of 1 kHz. 8. Make sure that the measured value is within the range specified in the overall frequency response chart. 9. If measured value is not within standard, adjust peaking coil L501 (L-CH), L502 (R-CH). Overall frequency response chart (Normal) 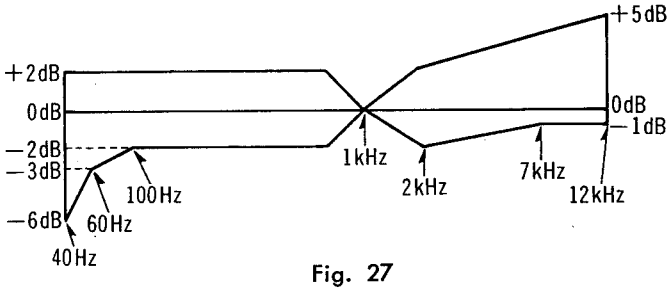 Fig. 27 10. Set the equalizer selector to 70μS and bias selector to HIGH (for CrO_2 tape). 11. Measure as same as manner above. 12. Make sure that the measured value is within the range specified in the overall frequency response chart for CrO_2 tape below. 13. If measured value is not within standard, adjust peaking coil L503 (L-CH), L504 (R-CH). Overall frequency response chart (CrO_2) 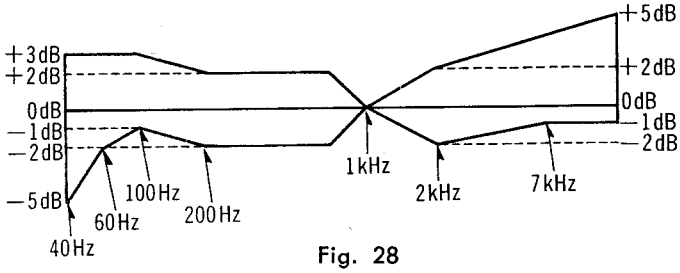 Fig. 28 Recording monitor frequency response 1. Set the monitor switch to TAPE and supply −44 dB input signal from AF oscillator, through ATT, to LINE IN jack. 2. Using test tape ($C\text{-}RA_2$ for normal tape), and place UNIT into record mode. 3. Change frequency of input signal 100 Hz, 150 Hz, 300 Hz, 700 Hz, 1 kHz, 2 kHz, 3 kHz and 6 kHz. 4. At this time, measure the recording monitor level at LINE OUT jack on VTVM. 5. Make sure that the measured value is within the range specified in the overall frequency response chart below. 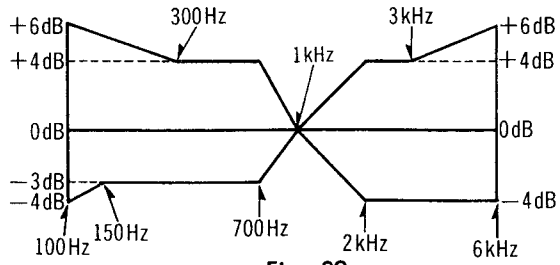 Fig. 29 6. If measured value is not within standard, adjust VR400.	* Use test tape ····· C-RI

ITEM	MEASUREMENT & ADJUSTMENT	REMARKS
Overall S/N ratio Equipment: * VTVM * AF oscillator * ATT * Oscilloscope * Test tape ··· C-RA (reference blank tape)	1. Test equipment connection is shown in fig. 25. 2. Supply 1 kHz signal to LINE IN and adjust ATT so that output level at LINE OUT indicates 0.42 V (−7 dB). 3. Make recording. 4. Make another recording without supplying signal (disconnect inpuit plug to LINE IN). 5. Rewind to recorded part and playback. 6. Measure output signal level and no signal level (noise), and determine the ratio in decibels (dB). 7. The value is difference between "Playback S/N and overall S/N", but for decibel calculation refer to "Playback S/N measurement" on page 10. **Standard value: Greater than 43 dB (without NAB filter)**	* Record/playback mode * Record master and record level control ····· MAX * Erase the tape with a bulk tape eraser. * Input selector ····· LINE IN
Dolby NR circuit Equipment: * VTVM * AF oscillator * ATT * Oscilloscope	1. Place UNIT into record mode, set the Dolby NR switch to OUT position and supply to LINE IN to obtain −34.5 dB at TP3 (L-CH), TP3 (R-CH) (frequency 5 kHz). 2. Confirm that the value at IN position is 8 dB greater than the value at OUT position of Dolby NR switch. 3. When it is not in condition above, adjust as follows. 4. Set VR301 (L-CH), VR301 (R-CH) to maximum. 5. Set the Dolby NR switch to IN position. 6. At this time adjust VR303 (L-CH), VR303 (R-CH) so that the reading of VTVM become 10 dB greater than the value in step (1) above. 7. Adjusting VR301 (L-CH), VR301 (R-CH), make the reading of VTVM become 2 dB smaller than the value obtainted through the adjustment in step (6) above.	* Record mode * Record master and record level control ····· MAX * Input selector ····· LINE IN * Stop the bias oscillation by unsoldering point Ⓐ shown in circuit board on page 18.
Battery check meter Equipment: * DC power	1. Test equipment connection is shown in fig. 30. 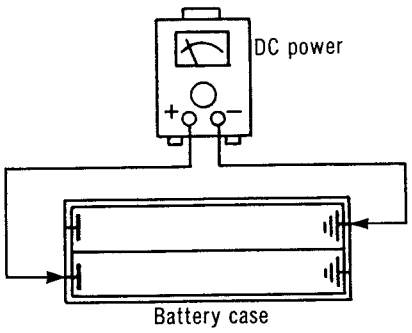 **Fig. 30** 2. Supply 6.5 V from DC power to battery terminal. 3. Then, push the battery check button and check whether the indication needle of the level meter (right) is in the position shown in fig. 31. 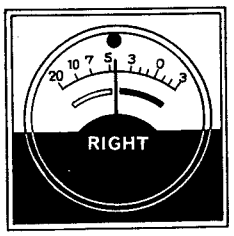 **Fig. 31** 4. If it deviate to the position shown above, adjust VR10.	

ITEM	MEASUREMENT & ADJUSTMENT	REMARKS
End-eye	1. Playback a C-60 (60-minute) tape. 2. Then, measure the elapsed time between the lamp begins to flicker and when the tape reaches its end. Standard value: 3 ± 1 minute 3. If the measured value is not within 3 ± 1 minute, adjust VR70.	* Playback mode

ADJUSTMENT PARTS LOCATION

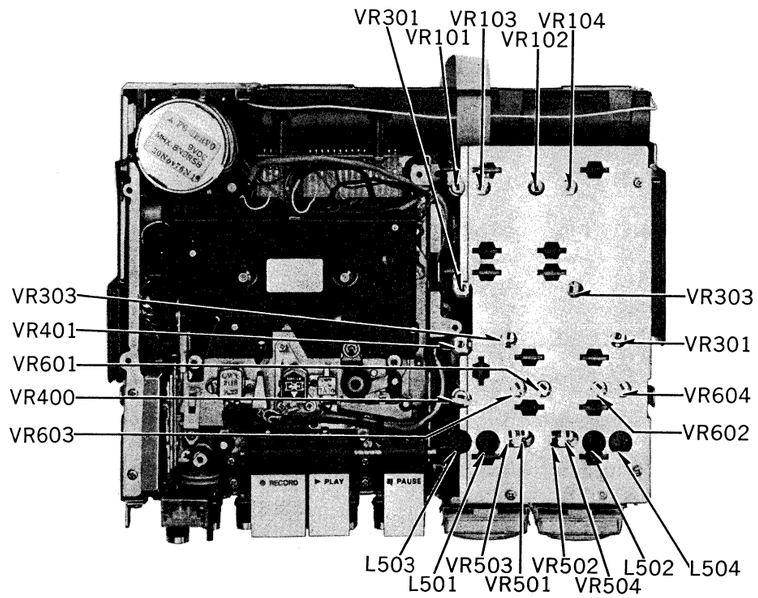

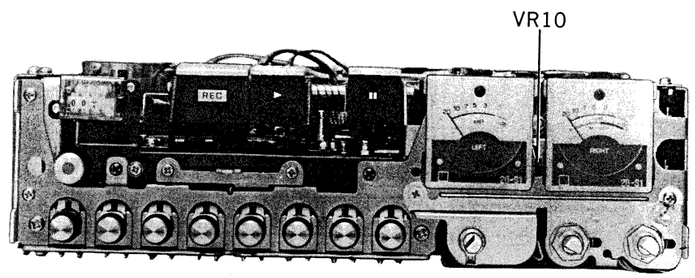

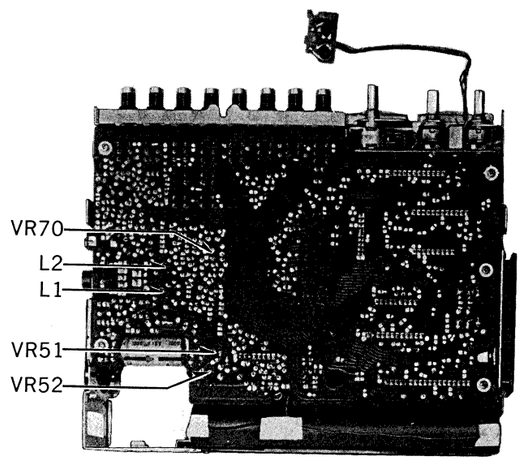

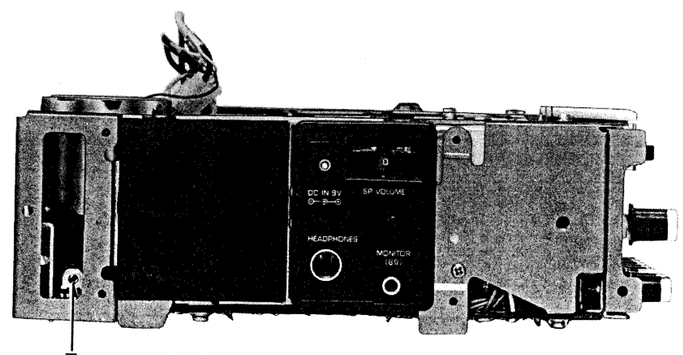

Fig. 32

SCHEMATIC DIAGRAM MODEL RS-686DS-D

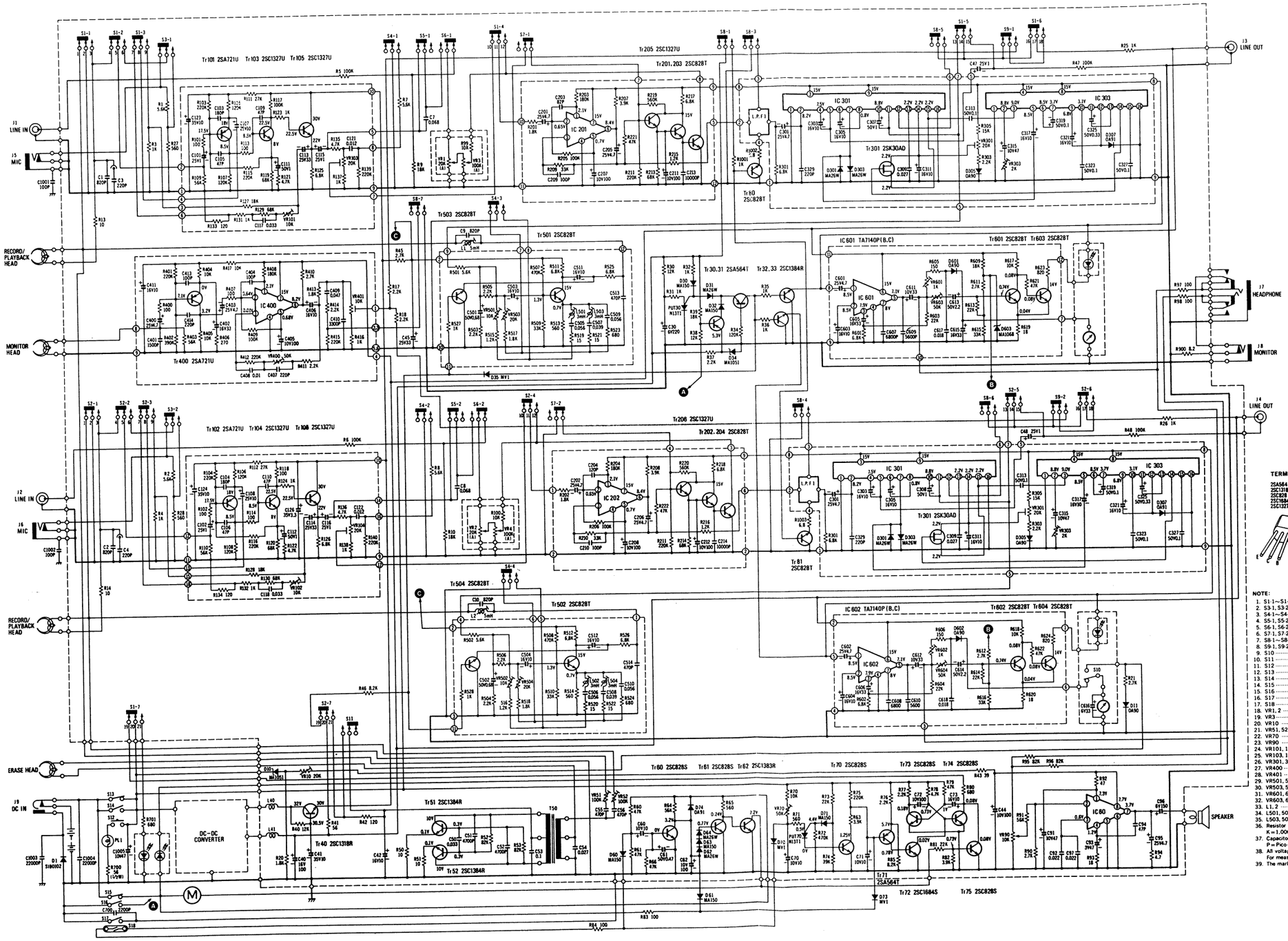

TERMINATIONS (BOTTOM VIEW)

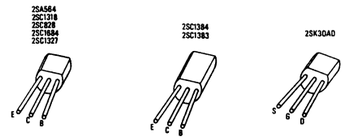

NOTE:

1. S1-1~S1-7, S2-1~S2-7 ..... Record/playback select switch (shown in playback position).
2. S3-1, S3-2 ..... MIC ATT switch (shown in "0dB" position).
3. S4-1~S4-4 ..... EQ switch (shown in "120μS" position).
4. S5-1, S5-2 ..... LOW CUT FILTER switch (shown in "OUT" position).
5. S6-1, S6-2 ..... INPUT select switch (shown in "LINE" position).
6. S7-1, S7-2 ..... LIMITER switch (shown in "OUT" position).
7. S8-1~S8-8 ..... DOLBY NR switch (shown in "OUT" position).
8. S9-1, S9-2 ..... MONITOR switch (shown in "SOURCE" position).
9. S10 ..... BATTERY CHECK switch.
10. S11 ..... BIAS switch (shown in "LOW" position).
11. S12 ..... METER LIGHT switch (shown in "OFF" position).
12. S13 ..... Playback switch (ON at playback).
13. S14 ..... Record switch (ON at record).
14. S15 ..... Motor ON/OFF switch.
15. S16 ..... Stop switch (ON at stop).
16. S17 ..... Pause switch (ON at pause).
17. S18 ..... Reed switch.
18. VR1, 2 ..... Record level control.
19. VR3 ..... Record master control.
20. VR10 ..... Battery check meter adjustment VR.
21. VR51, 52 ..... Bias current adjustment VR.
22. VR70 ..... End-eye indication time adjustment VR.
23. VR90 ..... Speaker volume control.
24. VR101, 102 ..... Playback equalizer adjustment VR.
25. VR103, 104 ..... Playback gain adjustment VR.
26. VR301, 302 ..... Dolby circuit adjustment VR.
27. VR400 ..... Recording monitor equalizer adjustment VR.
28. VR401 ..... Recording monitor gain adjustment VR.
29. VR501, 502 ..... Recording level adjustment VR (for normal tape).
30. VR503, 504 ..... Recording level adjustment VR (for CrO2 tape).
31. VR601, 602 ..... Level meter adjustment VR.
32. VR603, 604 ..... Peak indicator adjustment VR.
33. L1, 2 ..... Bias trap coil.
34. L501, 502 ..... Recording equalizer adjustment coil (for normal tape).
35. L503, 504 ..... Recording equalizer adjustment coil (for CrO2 tape).
36. Resistor values are in ohms (Ω), 1/4 watt unless specified otherwise. K=1,000Ω.
37. Capacitor values are in microfarads (μF) unless specified otherwise. P=Pico farads.
38. All voltage values shown in circuitry are under no signal condition with volume control at minimum position. For measurement, use VTVM.
39. The mark (▼) shows test point. e.g. ▼=Test point 1.

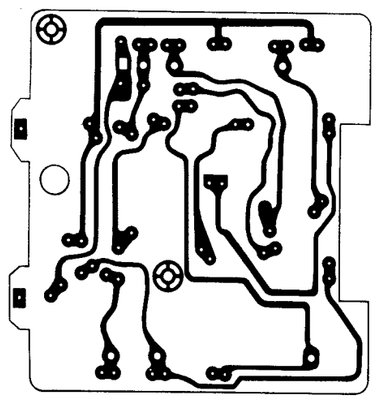

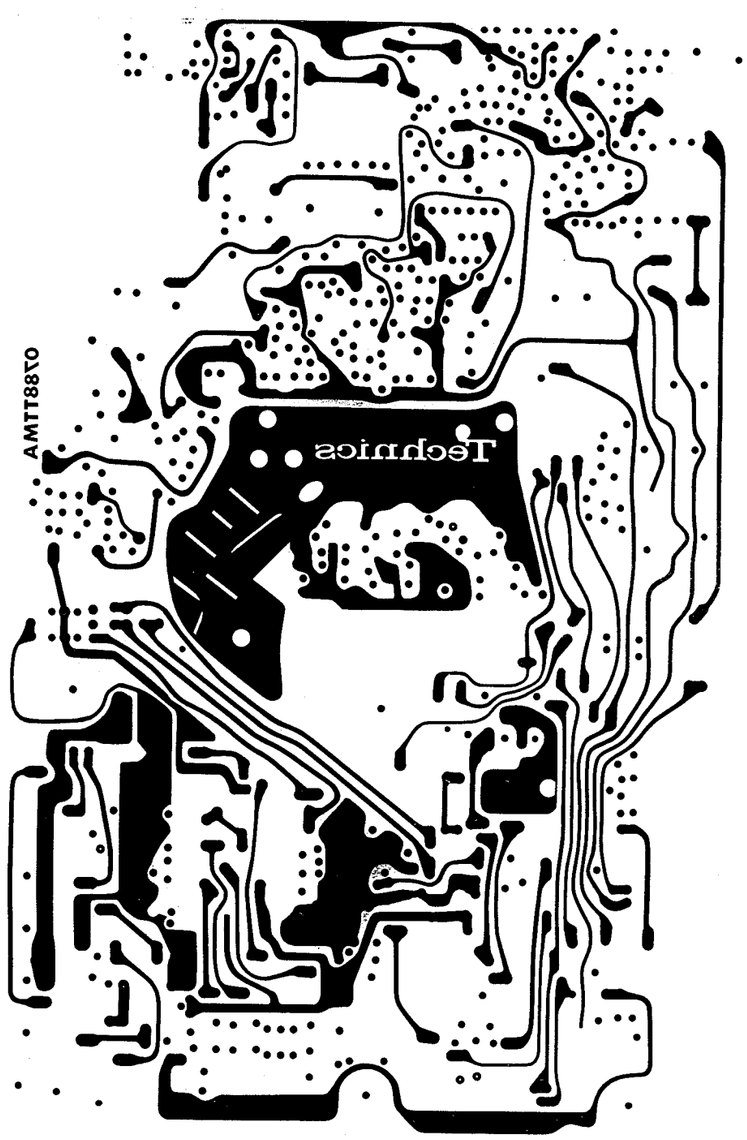
AMT88TO
Technics

CIRCUIT BOARD

MAIN CIRCUIT BOARD

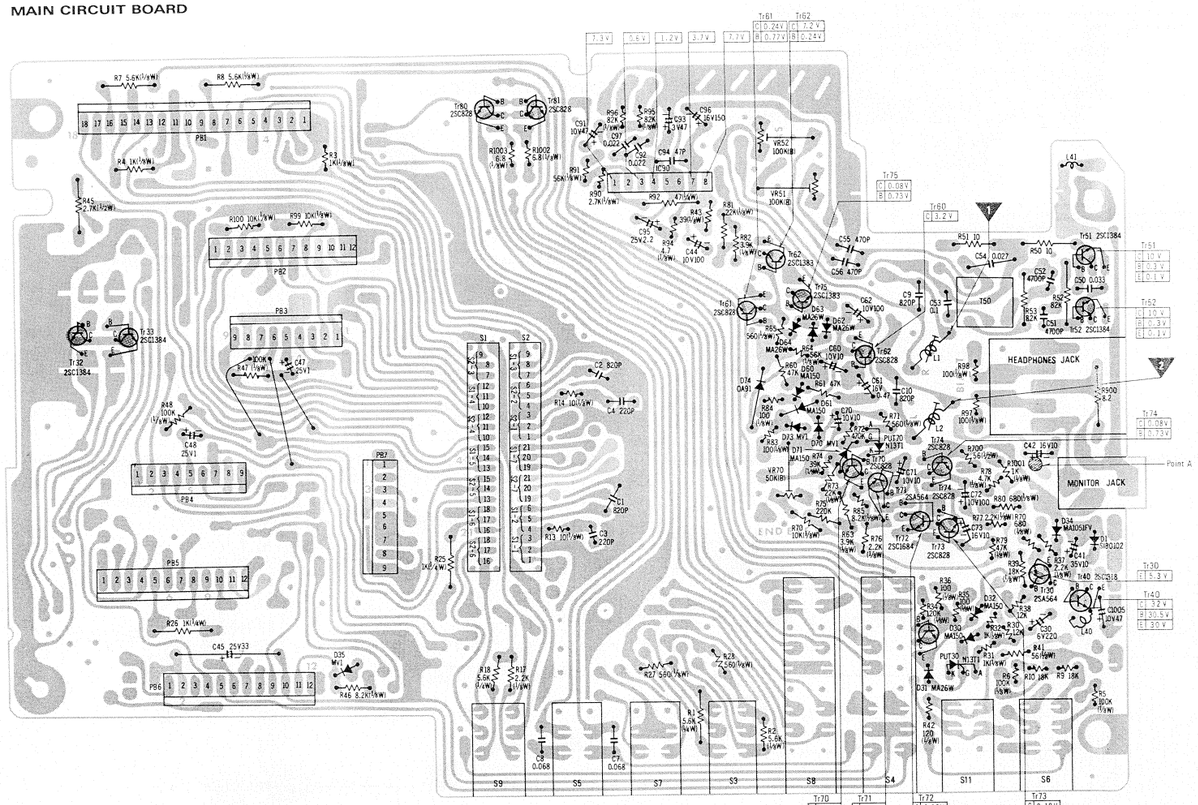

DOLBY NR CIRCUIT BOARD

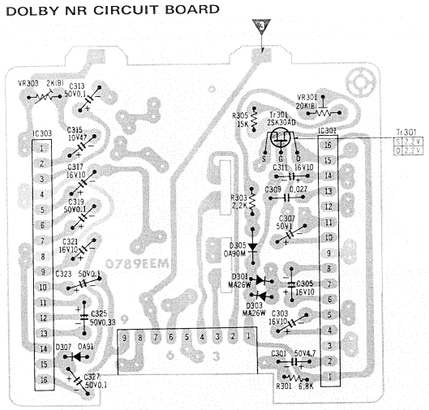

METER AMP CIRCUIT BOARD

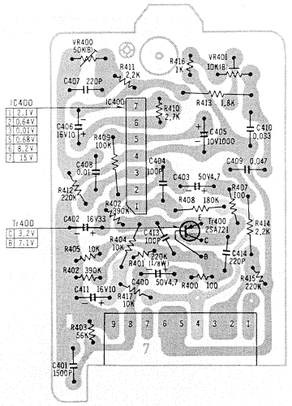

MONITOR AMP CIRCUIT BOARD

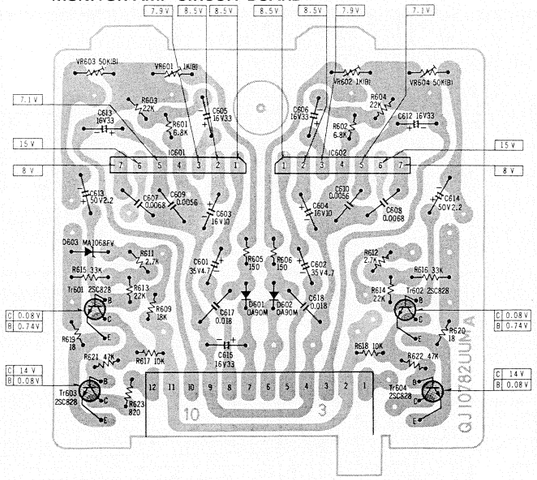

VOLUME CIRCUT BOARD

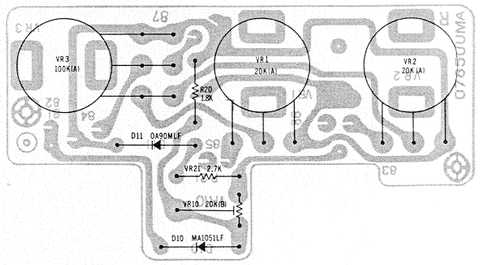

PLAYBACK EQ & MIC AMP CIRCUIT BOARD

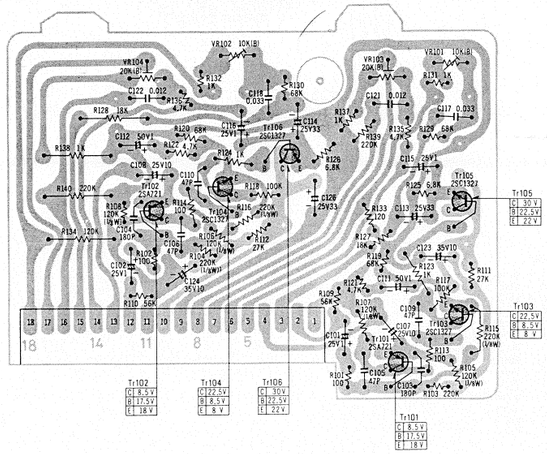

LINE AMP CIRCUIT BOARD

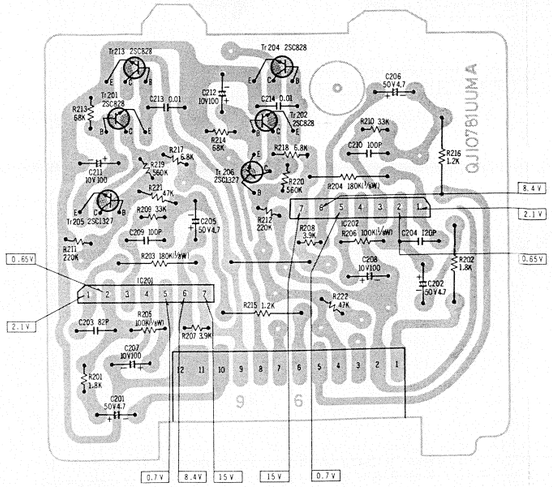

RECORD EQUALIZATION CIRCUIT BOARD

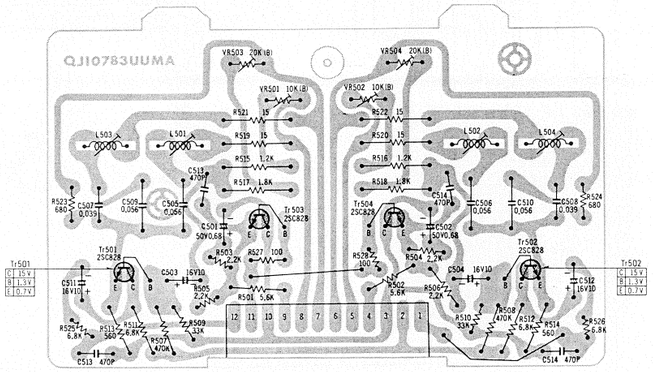

NOTE:
The circuit shown in red on the conductor is B circuit. Values indicated in ▭ are DC voltages between the chassis and electrical parts.

WIRING CONNECTION DIAGRAM MODEL RS-686DS-D

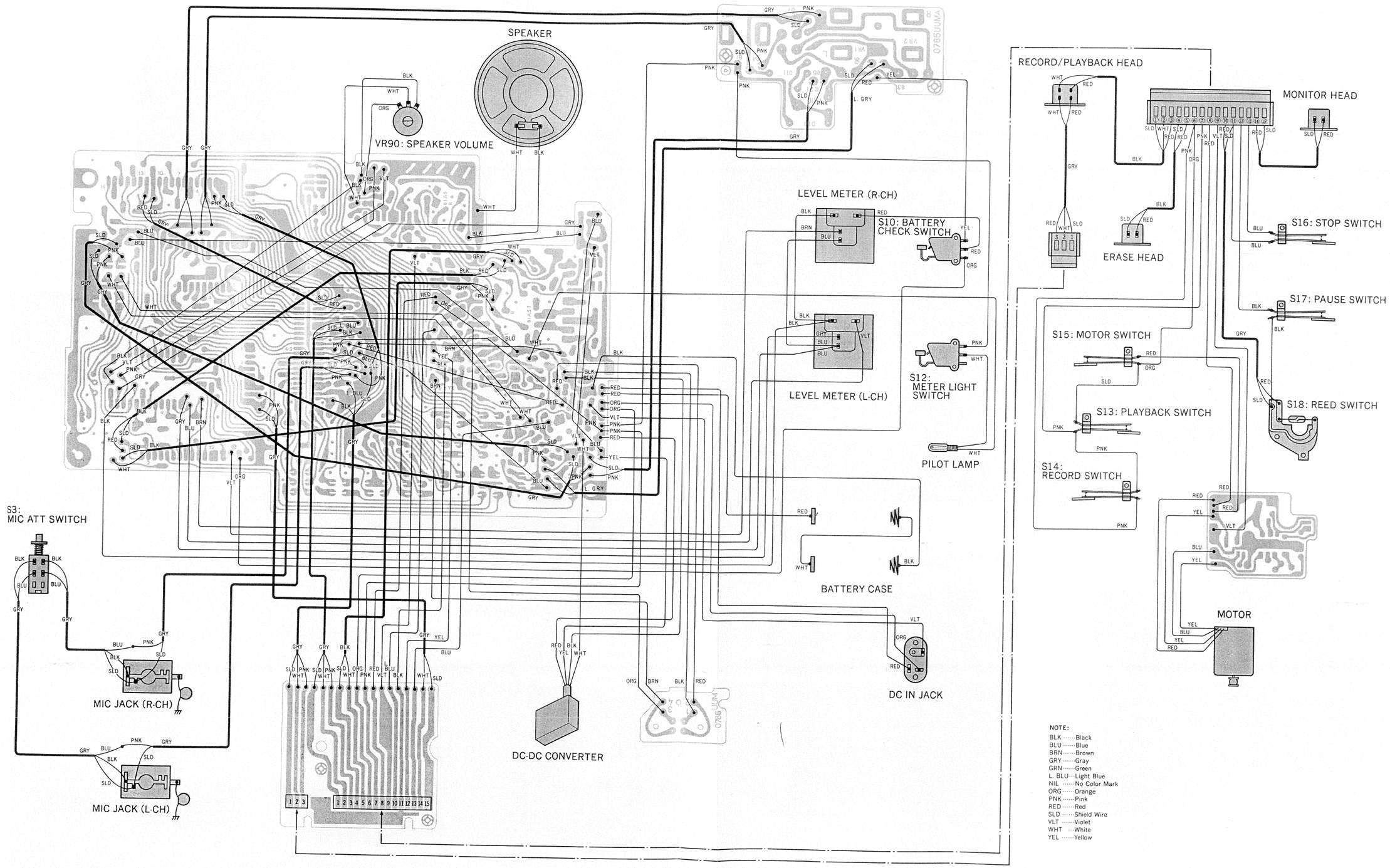

NOTE:
BLK ·····Black
BLU ·····Blue
BRN ·····Brown
GRY ·····Gray
GRN ·····Green
L. BLU···Light Blue
NIL ·····No Color Mark
ORG ·····Orange
PNK ·····Pink
RED ·····Red
SLD ·····Shield Wire
VLT ·····Violet
WHT ···White
YEL ·····Yellow

EXPLODED VIEWS

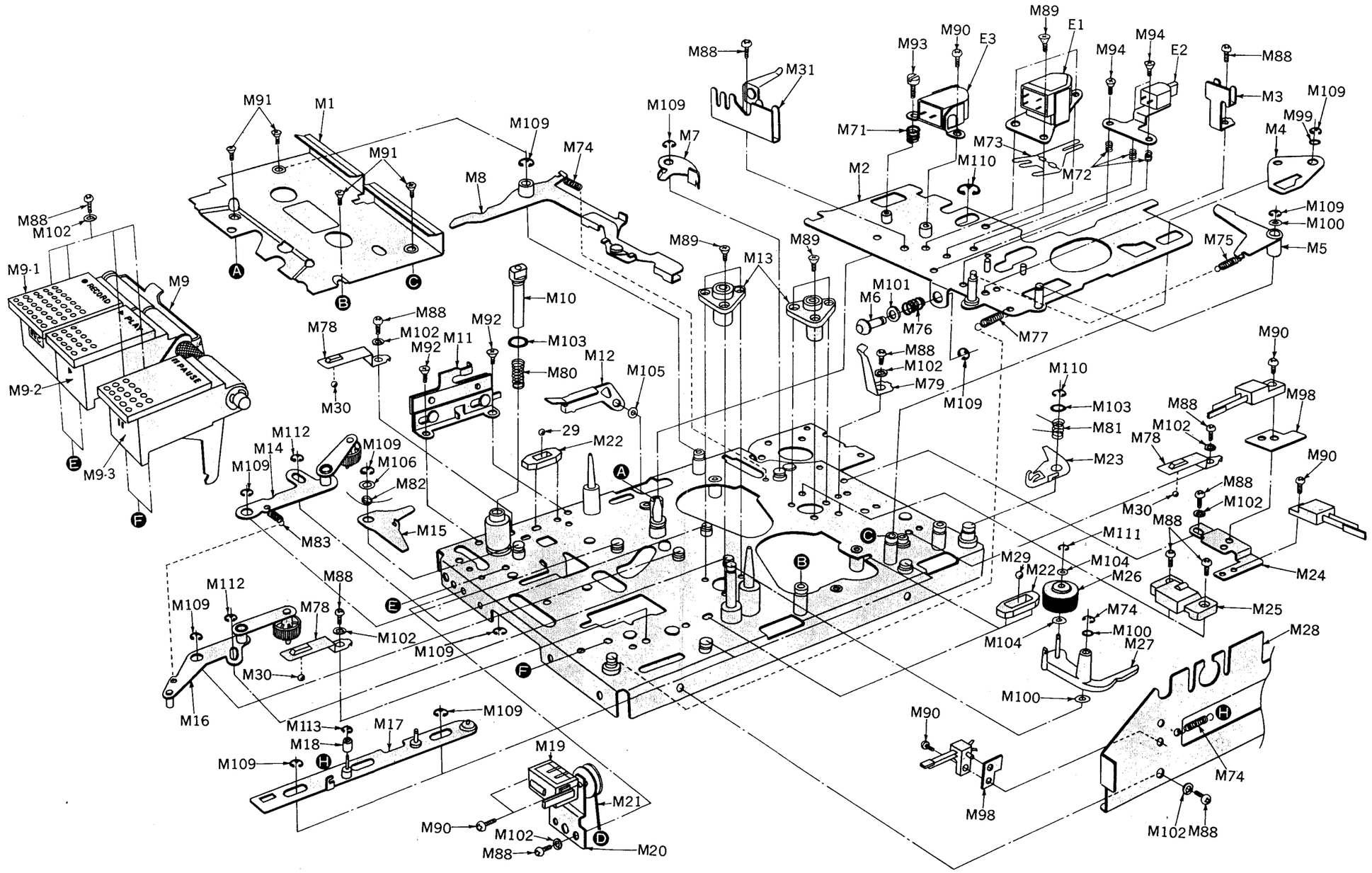

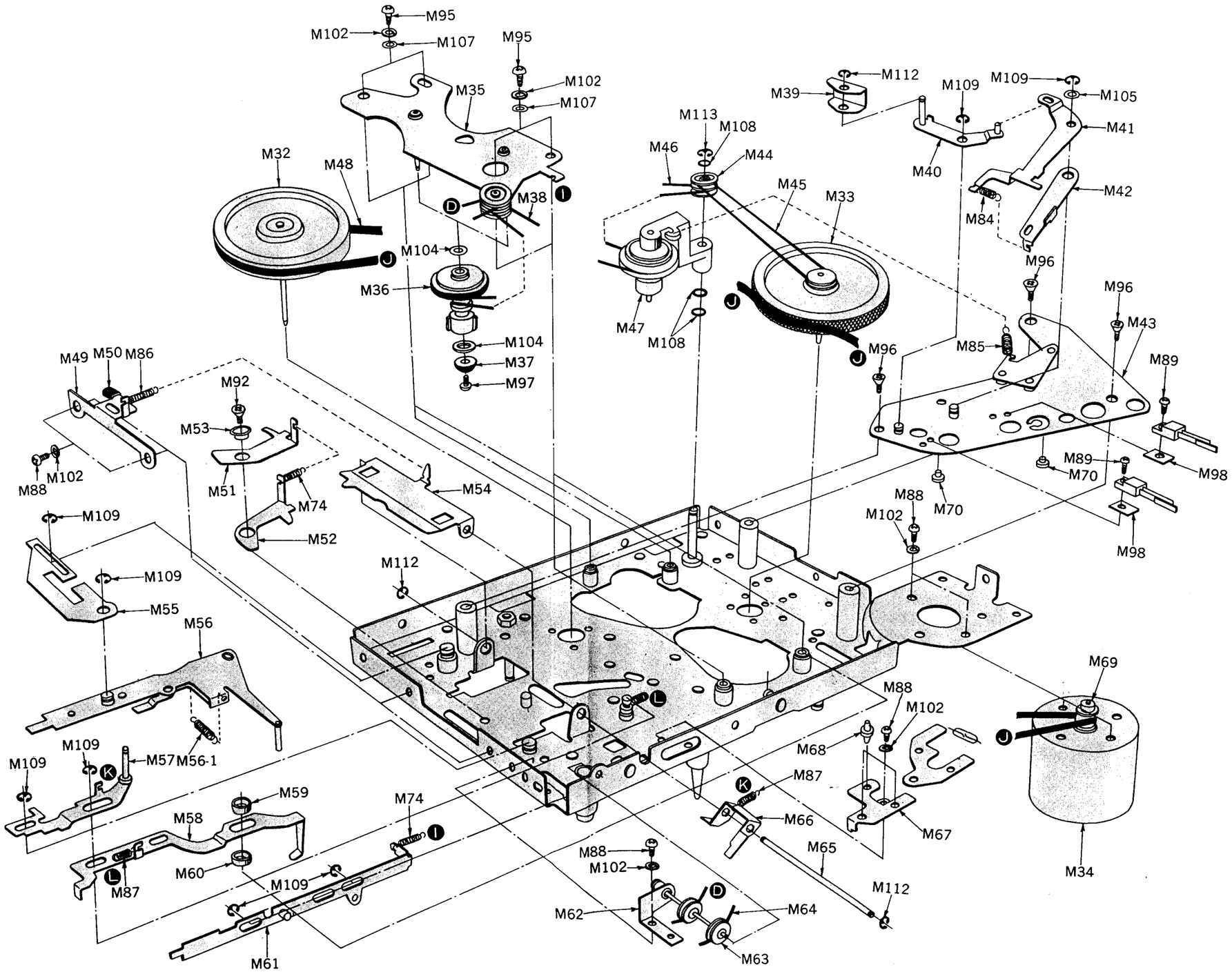
M95
M102
M107
M95
M102
M107
M35
M32
M48
M38
M104
M36
M104
M37
M97
M112
M39
M109
M109
M105
M41
M113
M108
M46
M44
M40
M45
M33
M42
M84
M96
M96
M43
M47
M108
M96
M85
M89
M49
M50
M86
M92
M53
M88
M102
M51
M74
M54
M52
M89
M70
M98
M88
M70
M102
M98
M109
M109
M55
M56
M112
M69
M88
M102
M68
M109
M109
M57
M56-1
M87
M59
M74
M58
M66
M67
M60
M87
M109
M88
M102
M65
M34
M112
M62
M64
M61
M63

ELECTRICAL PARTS LOCATION

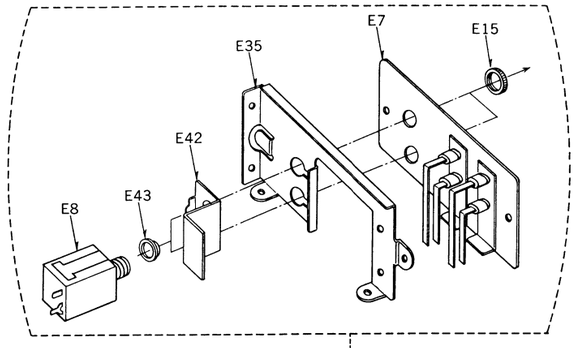

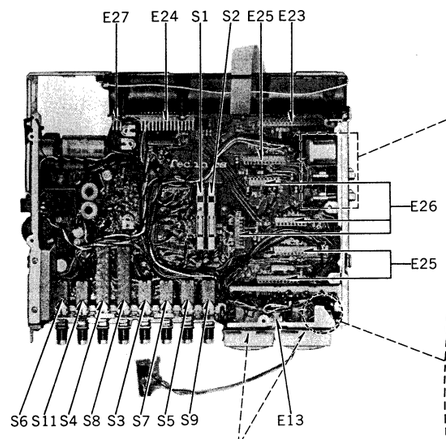

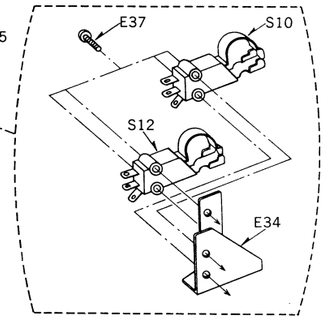

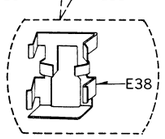

PB1: MIC, PLAYBACK EQ AMP

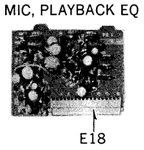

PB2: LINE AMP

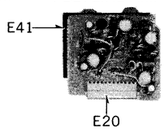

PB3,4: DOLBY AMP

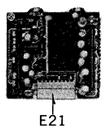

PB3,4: DOLBY AMP

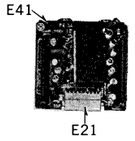

PB5: HEADPHONE, METER AMP

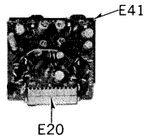

PB6: RECORDING EQ AMP

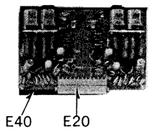

PB7: MONITOR AMP

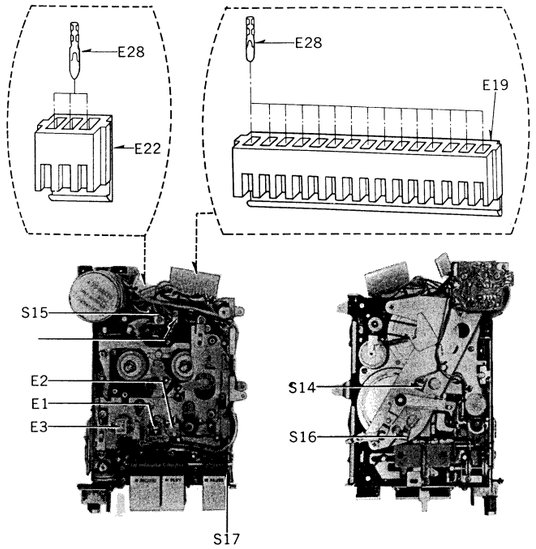

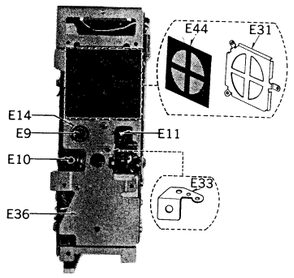

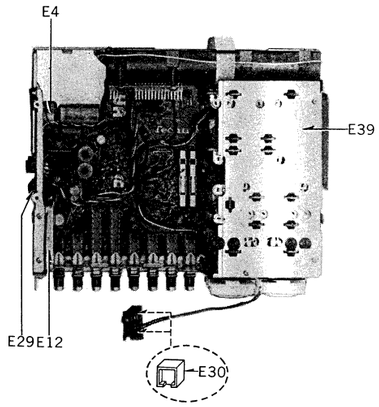

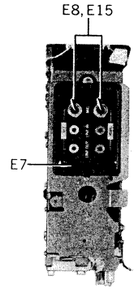

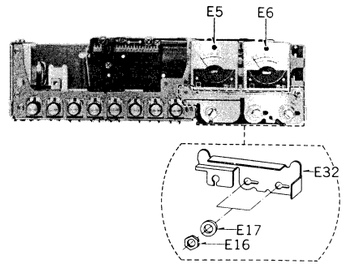

CABINET PARTS

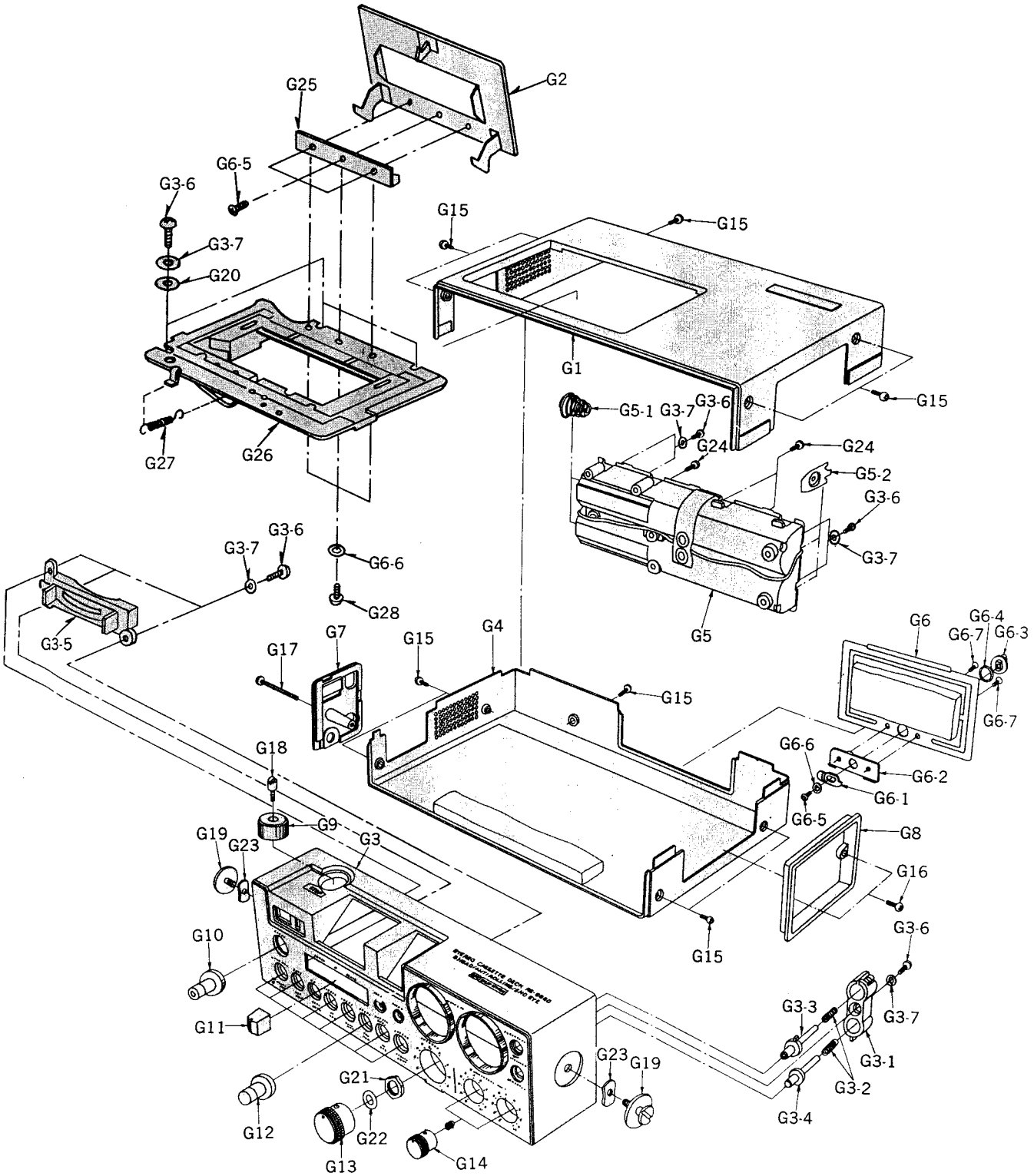

Printed in Japan

REPLACEMENT PARTS LIST

Technics MODEL RS-686DS-D

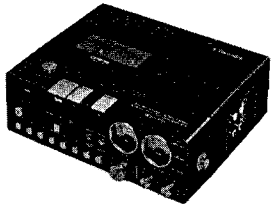

RS-686DS-D

NOTE:

1. Be sure to make your orders of replacement parts according to this list.
2. "Ⓝ" in "Remarks" column indicates new parts.

NOTA:

1. Habrá que asegurarse que los pedidos de piezas de repuesto se hagan según esta lista.
2. "Ⓝ" marcado en la columna "Remarks", quiere decir que las piezas son nuevas.

NOTE:

1. Bien s'assutet de se conformer à la liste suivante pour les commandes de pièces de rechange.
2. "Ⓝ", dans la colonne "Remarks", indique les pièces nouvelles.

HIENWEIS:

1. Bestellen Sie Ihre Ersatzteile genau nach dieser Liste.
2. "Ⓝ" in der "Remarks" Spalte bedeutet "neue Teile".

按：

1. 關於代用零件之訂購，務請依照此表而行之爲荷。
2. 「備考」(Remarks)一欄中之"Ⓝ"形符號標記表示該零件爲新出品。

RS-686DS-D

Ref. No.		Part No.	Part Name & Description	Pcs/Set	Remarks
			MECHANICAL PARTS		
M1		QXH0253	Mechanism Panel Ornament	1	Ⓝ
M2		QXK1869	Head Base Plate Assembly	1	Ⓝ
M3		QMF1878	Clamper	1	Ⓝ
M4		QML3096	Pause Lever	1	Ⓝ
M5		QXL1084	Pressure Lever	1	Ⓝ
M6		QMN2189	Guide Shaft	1	Ⓝ
M7		QML3095	Switch Lever	1	Ⓝ
M8		QXL1078	Brake Lever Assembly	1	Ⓝ
M9		QXB0468B	Push Button Assembly	1	Ⓝ
M9-1		QXB0471	Record Button Assembly	1	Ⓝ
M9-2		QXB0472	Playback Button Assembly	1	Ⓝ
M9-3		QXB0473	Pause Button Assembly	1	Ⓝ
M10		QMN2179A	Stop Shaft	1	Ⓝ
M11		QXA0592	Eject Angle Assembly	1	Ⓝ
M12		QML3099	Eject Lever	1	Ⓝ
M13		QXM0138B	Flywheel Metal Assembly	2	Ⓝ
M14		QXL1079	Rewind Lever Assembly	1	Ⓝ
M15		QML3102	Lever-A	1	Ⓝ
M16		QXL1081	Fast Forward Lever Assembly	1	Ⓝ
M17		QXR0302	Pause Rod Assembly	1	Ⓝ
M18		QMP1330	Roller	1	Ⓝ
M19		QDC0089	Tape Counter	1	Ⓝ
M20		QMA2995A	Counter Angle	1	Ⓝ
M21		QDB0235	Counter Belt-2	1	Ⓝ
M22		QMH2009	Ball Holder	3	Ⓝ
M23		QML2898A	Pause Lock Plate	1	Ⓝ RS-600USD
M24		QMA2990	Switch Angle	1	Ⓝ
M25		QMZ1188	Cassette Table	1	Ⓝ
M26		QXP0198	Pressure Roller	1	Ⓝ
M27		QXL1049	Pressure Roller Lever	1	Ⓝ
M28		QMA3029	Mechanism Holding Angle	1	Ⓝ
M29		QDK1006	Steel Ball 3φ	3	RQ-512SD
M30		QDK1012	Steel Ball 2.5φ	3	RS-630USD

Ref. No.	Part No.	Part Name & Description	Pcs/Set	Remarks
M31	QXA0595A	Angle-1 Assembly	1	Ⓝ
M32	QXF0125	Flywheel-1	1	Ⓝ
M33	QXF0126	Flywheel-2	1	Ⓝ
M34	MHX8N9RSB	Motor	1	Ⓝ
M35	QXH0255	Reel Suspension Assembly	1	Ⓝ
M36	QXD0071	Reel Table Assembly	2	Ⓝ
M37	QGK9135	Reel Table Cap	2	Ⓝ
M38	QDB0234	Counter Belt-1	1	Ⓝ
M39	QML3094	Record Lever-3	1	Ⓝ
M40	QXL1088	Record Lever-2 Assembly	1	Ⓝ
M41	QML3157	Record Lever-1	1	Ⓝ
M42	QML3158	Record Lever-2	1	Ⓝ
M43	QXH0254	Thrust Retainer Assembly	1	Ⓝ
M44	QDP1716	Connection Pulley	1	Ⓝ
M45	QDB0232	Takeup Belt-1	1	Ⓝ
M46	QDB0233	Takeup Belt-2	1	Ⓝ
M47	QXL1082	Idler Lever Assembly	1	Ⓝ
M48	QDB0236	Capstan Belt	1	Ⓝ
M49	QMF1876	Lever Guide	1	Ⓝ
M50	QBG1132	Stopper Rubber	1	RS-630USD
M51	QML3083	Lock Lever-2	1	Ⓝ
M52	QML3082	Lock Lever-1	1	Ⓝ
M53	QMC0060	Guide Collar	1	Ⓝ
M54	QML3086	Lock Plate	1	Ⓝ
M55	QMR1568	Safety Rod	1	Ⓝ
M56	QXL1077	Fast Forward Lever Assembly	1	Ⓝ
M56-1	QBT1769M	Motor Operation Rod Spring	1	Ⓝ
M57	QXR0293	Record Rod Assembly	1	Ⓝ
M58	QMR1569	Erase Safety Rod	1	Ⓝ
M59	QMZ1190	Collar-2	1	Ⓝ
M60	QMZ1191	Collar-3	1	Ⓝ
M61	QXR0292	Eject Rod Assembly	1	Ⓝ
M62	QXA0593	Angle-2 Assembly	1	Ⓝ
M63	QBJ2088	Counter Pulley	2	RS-630USD
M64	QDB0235	Counter Belt-2	1	Ⓝ

RS-686DS-D

Ref. No.	Part No.	Part Name & Description	Pcs/Set	Remarks
M65	QMN2178	Lock Plate Shaft	1	Ⓝ
M66	QML3098	Stop Lever	1	Ⓝ
M67	QMA2993	P.C.B. Holding Angle	1	Ⓝ
M68	QBG1570	Cushion Rubber	3	Ⓝ
M69	QXP0565	Motor Pulley Assembly	1	Ⓝ
M69-1	XXE26D4FZ	Set Screw	1	COMMON
M70	QMM1969	Thrust Retainer	2	Ⓝ
M71	QBC1235	Head Spring-1	1	RS-671USD
M72	QBCA0008	Head Spring-2	1	RQ-212DS-D
M73	QBP1500	Head Spring-3	1	Ⓝ
M74	QBT1475DM	Fast Forward Spring	3	RQ-432SD
M75	QBT1606	Pressure Lever Spring	1	Ⓝ
M76	QBC1294	Playback Spring	1	Ⓝ
M77	QBT1586M	Spring	1	Ⓝ
M78	QBP1733	Ball Holding Spring	3	Ⓝ
M79	QBP1730	Cassette Holding Spring	1	Ⓝ
M80	QBC1190	Cushion Spring	1	Ⓝ
M81	QBN1527	Pause Lock Spring	1	Ⓝ
M82	QBN1529	Record Spring	1	Ⓝ
M83	QBT1828	Return Spring	1	Ⓝ
M84	QBT1531	Dial Spring	1	RQ-432SD
M85	QBT1745M	Record Rod Spring	1	Ⓝ
M86	QBT1757M	Brake Spring	1	RS-671USD
M87	QBT1785M	Idler Spring	1	Ⓝ
M88	XSN26+4	Screw ⊕2.6×4	18	COMMON
M89	XSS2+4	Screw ⊕2×4	6	〃
M90	XSN2+4	Screw ⊕2×4	7	〃
M91	QHQ1185	Screw	4	Ⓝ
M92	XSS26+6	Screw ⊕2.6×6	3	COMMON
M93	QHQ1211	Screw	1	RS-671USD
M94	XQS2−6FZ	Screw ⊕2×6	3	COMMON
M95	XSN26+6	Screw ⊕2.6×6	4	〃
M96	XSS3+6S	Screw ⊕3×6	2	〃
M97	XQS14A4FN	Screw ⊕1.4×4	2	〃
M98	QBK1248	Fiber Washer	4	〃

Ref. No.	Part No.	Part Name & Description	Pcs/ Set	Remarks
M99	QBW2019	Poly Washer	1	COMMON
M100	QBW2016	〃	3	〃
M101	QBK7128	Fiber Washer	1	〃
M102	XWA26B	Spring Washer 2.6φ	16	〃
M103	QBK7129	Fiber Washer	2	〃
M104	QBW2012	Poly Washer	2	〃
M105	QBK7007	Fiber Washer	1	〃
M106	QBK7075	〃	1	〃
M107	XWG26	Flat Washer	4	〃
M108	QBW2014	Poly Washer	4	〃
M109	XUC3FT	Stop Ring 3φ	15	〃
M110	XUC4FT	Stop Ring 4φ	2	〃
M111	XUC15FT	Stop Ring 1.5φ	1	〃
M112	XUC25FT	Stop Ring 2.5φ	6	〃
M113	XUC2FT	Stop Ring 2φ	1	〃
		RESISTORS		
R1	ERD25TJ562	Carbon Resistor 5.6KΩ 1/4W	1	
R2	ERD10TJ562	〃 5.6KΩ 1/8W	1	
R3, 4	ERD10TJ102	〃 1KΩ 1/8W	2	
R5, 6	ERD10EJ104	〃 100KΩ 1/8W	2	
R7, 8	ERD25TJ562	〃 5.6KΩ 1/4W	2	
R9, 10	ERD10EJ183	〃 18KΩ 1/4W	2	
R13, 14	ERD10EJ100	〃 10Ω 1/8W	2	
R17, 18	ERD10TJ222	〃 2.2KΩ 1/8W	2	
R20	ERD25TJ182	〃 1.8KΩ 1/4W	1	
R21	ERD25TJ272	〃 2.7KΩ 1/4W	1	
R25, 26	ERD25TJ102	〃 1KΩ 1/4W	2	
R27, 28	ERD10TJ561	〃 560Ω 1/8W	2	
R30	ERD10EJ123	〃 12KΩ 1/8W	1	
R31, 32	ERD10EJ102	〃 1KΩ 1/8W	2	
R34	ERD10EJ124	〃 120KΩ 1/8W	1	
R35, 36	ERD10EJ101	〃 100Ω 1/8W	2	
R37	ERD10EJ222	〃 2.2KΩ 1/8W	1	
R38	ERD10EJ123	〃 12KΩ 1/8W	1	

RS-686DS-D

Ref. No.	Part No.	Part Name & Description	Pcs/ Set	Remarks
R39	ERD10TJ183	Carbon Resistor 18KΩ 1/8W	1	
R40	ERD10EJ123	〃 12KΩ 1/8W	1	
R41	ERD10EJ560	〃 56Ω 1/8W	1	
R42	ERD10EJ121	〃 120Ω 1/8W	1	
R43	ERD10TJ390	〃 39Ω 1/8W	1	
R45	ERD25TJ272	〃 2.7KΩ 1/4W	1	
R46	ERD10TJ822	〃 8.2KΩ 1/8W	1	
R47, 48	ERD10TJ104	〃 100KΩ 1/8W	2	
R50, 51	ERD25TJ100	〃 10Ω 1/4W	2	
R52, 53	ERD25TJ823	〃 82KΩ 1/4W	2	
R60, 61	ERD10TJ473	〃 47KΩ 1/8W	2	
R63	ERD10TJ392	〃 8.9KΩ 1/8W	1	
R64	ERD10EJ563	〃 56KΩ 1/8W	1	
R65	ERD10EJ561	〃 560Ω 1/8W	1	
R66	ERD10EJ473	〃 47KΩ 1/8W	1	
R70	ERD10TJ103	〃 10KΩ 1/8W	1	
R71	ERD10EJ561	〃 560Ω 1/8W	1	
R72	ERD10EJ474	〃 470KΩ 1/8W	1	
R73	ERD10TJ223	〃 22KΩ 1/8W	1	
R74	ERD10EJ393	〃 39KΩ 1/8W	1	
R75	ERD10TJ224	〃 220KΩ 1/8W	1	
R76	ERD10TJ222	〃 2.2KΩ 1/8W	1	
R77	ERD10EJ222	〃 2.2KΩ 1/8W	1	
R78	ERD10EJ472	〃 4.7KΩ 1/8W	1	
R79	ERD10EJ473	〃 47KΩ 1/8W	1	
R80	ERD10EJ681	〃 680Ω 1/8W	1	
R81	ERD10TJ223	〃 22KΩ 1/8W	1	
R82	ERD10TJ392	〃 3.9KΩ 1/8W	1	
R83, 84	ERD10EJ101	〃 100Ω 1/8W	2	
R85	ERD10EJ822	〃 8.2KΩ 1/8W	1	
R90	ERD10EJ272	〃 2.7KΩ 1/8W	1	
R91	ERD10EJ563	〃 56KΩ 1/8W	1	
R92	ERD25TJ470	〃 47Ω 1/4W	1	
R93	ERD10EJ180	〃 18Ω 1/8W	1	
R94	ERD10EJ4R7	〃 4.7Ω 1/8W	1	

Ref. No.	Part No.	Part Name & Description	Pcs/Set	Remarks
R95, 96	ERD10EJ823	Carbon Resistor 82KΩ 1/8W	2	
R97, 98	ERD10EJ101	〃 100Ω 1/8W	2	
R99, 100	ERD10TJ103	〃 10KΩ 1/8W	2	
R101, 102	ERD25TJ101	〃 100Ω 1/4W	2	
R103, 104	ERD18VSJ224	〃 220KΩ 1/8W	2	
R105, 106, 107, 108				
	ERD18VSJ124	〃 120KΩ 1/8W	4	
R109, 110	ERD25TJ563	〃 56KΩ 1/4W	2	
R111, 112	ERD25TJ273	〃 27KΩ 1/4W	2	
R113, 114	ERD25TJ101	〃 100Ω 1/4W	2	
R115, 116	ERD18VSJ224	〃 220KΩ 1/8W	2	
R117, 118	ERD25TJ104	〃 100KΩ 1/4W	2	
R119, 120	ERD25TJ683	〃 68KΩ 1/4W	2	
R121, 122	ERD25TJ472	〃 4.7KΩ 1/4W	2	
R123, 124	ERD25TJ102	〃 1KΩ 1/4W	2	
R125, 126	ERD25TJ682	〃 6.8KΩ 1/4W	2	
R127, 128	ERD25TJ183	〃 18KΩ 1/4W	2	
R129, 130	ERD25TJ683	〃 68KΩ 1/4W	2	
R131, 132	ERD25TJ102	〃 1KΩ 1/4W	2	
R133, 134	ERD25TJ121	〃 120Ω 1/4W	2	
R135, 136	ERD25TJ472	〃 4.7KΩ 1/4W	2	
R137, 138	ERD25TJ102	〃 1KΩ 1/4W	2	
R139, 140	ERD25TJ224	〃 220KΩ 1/4W	2	
R201, 202	ERD25TJ182	〃 1.8KΩ 1/4W	2	
R203, 204	ERD18TSJ184	〃 180KΩ 1/8W	2	
R205, 206	ERD18TSJ104	〃 100KΩ 1/8W	2	
R207, 208	ERD25TJ392	〃 3.9KΩ 1/4W	2	
R209, 210	ERD25TJ333	〃 33KΩ 1/4W	2	
R211, 212	ERD25TJ224	〃 220KΩ 1/4W	2	
R213, 214	ERD25TJ683	〃 68KΩ 1/4W	2	
R215, 216	ERD25TJ122	〃 1.2KΩ 1/4W	2	
R217, 218	ERD25TJ682	〃 6.8KΩ 1/4W	2	
R219, 220	ERD25TJ564	〃 560KΩ 1/4W	2	
R221, 222	ERD25TJ473	〃 47KΩ 1/4W	2	
R301	ERD25TJ682	〃 6.8KΩ 1/4W	1	

RS-686DS-D

Ref. No.	Part No.	Part Name & Description	Pcs/Set	Remarks
R303	ERD25TJ222	Carbon Resistor 2.2KΩ 1/4W	1	
R305	ERD25TJ153	〃 15KΩ 1/4W	1	
R400	ERD25TJ101	〃 100Ω 1/4W	1	
R401	ERD18VSJ224	〃 220KΩ 1/8W	1	
R402	ERD18VSJ394	〃 390KΩ 1/8W	1	
R403	ERD25TJ563	〃 56KΩ 1/4W	1	
R404, 405	ERD25TJ103	〃 10KΩ 1/4W	2	
R406	ERD25TJ271	〃 270Ω 1/4W	1	
R407	ERD25TJ101	〃 100Ω 1/4W	1	
R408	ERD25TJ184	〃 180KΩ 1/4W	1	
R409	ERD25TJ104	〃 100KΩ 1/4W	1	
R410	ERD25TJ272	〃 2.7KΩ 1/4W	1	
R411	ERD25TJ222	〃 2.2KΩ 1/4W	1	
R412	ERD25TJ224	〃 220KΩ 1/4W	1	
R413	ERD25TJ182	〃 1.8KΩ 1/4W	1	
R414	ERD25TJ222	〃 2.2KΩ 1/4W	1	
R415	ERD25TJ224	〃 220KΩ 1/4W	1	
R416	ERD25TJ102	〃 1KΩ 1/4W	1	
R417	ERD25TJ103	〃 10KΩ 1/4W	1	
R501, 502	ERD25TJ562	〃 5.6KΩ 1/4W	2	
R503, 504, 505, 506				
	ERD25TJ222	〃 2.2KΩ 1/4W	4	
R507, 508	ERD25TJ474	〃 470KΩ 1/4W	2	
R509, 510	ERD25TJ333	〃 33KΩ 1/4W	2	
R511, 512	ERD25TJ682	〃 6.8KΩ 1/4W	2	
R513, 514	ERD25TJ561	〃 560Ω 1/4W	2	
R515, 516	ERD25TJ122	〃 1.2KΩ 1/4W	2	
R517, 518	ERD25TJ182	〃 1.8KΩ 1/4W	2	
R519, 520, 521, 522				
	ERD25TJ150	〃 15Ω 1/4W	4	
R523, 524	ERD25TJ681	〃 680Ω 1/4W	2	
R525, 526	ERD25TJ682	〃 6.8KΩ 1/4W	2	
R527, 528	ERD25TJ101	〃 100Ω 1/4W	2	
R601, 602	ERD25TJ682	〃 6.8KΩ 1/4W	2	
R603, 604	ERD25TJ223	〃 22KΩ 1/4W	2	

Ref. No.	Part No.	Part Name & Description	Pcs/Set	Remarks
R605, 606	ERD25TJ151	Carbon Resistor 150Ω 1/4W	2	
R609	ERD25TJ183	〃 18KΩ 1/4W	1	
R611, 612	ERD25TJ272	〃 2.7KΩ 1/4W	2	
R613, 614	ERD25TJ223	〃 22KΩ 1/4W	2	
R615, 616	ERD25TJ333	〃 33KΩ 1/4W	2	
R617, 618	ERD25TJ103	〃 10KΩ 1/4W	2	
R619, 620	ERD25TJ180	〃 18Ω 1/4W	2	
R621, 622	ERD25TJ473	〃 47KΩ 1/4W	2	
R623, 624	ERD25TJ821	〃 820Ω 1/4W	2	
R700	ERG12ANJ560	Metal-oxide Resistor 56Ω 1/2W	1	
R701	ERD10EJ681	Carbon Resistor 680Ω 1/8W	1	
R900	ERD25TJ8R2	〃 8.2Ω 1/4W	1	
R1001	ERD10EJ102	〃 1KΩ 1/8W	1	
R1002, 1003	ERD10TJ6R8	〃 6.8Ω 1/8W	1	
		VARIABLE RESISTORS		
VR1, 2	EVH9WA084A24	Variable Resistor 20KΩ(A)	2	Ⓝ
VR3	EWK78A079A15	〃 100KΩ(A)	1	Ⓝ
VR10	EVNK4AA00B24	Semi-fixed Variable Resistor 20KΩ(B)	1	Ⓝ
VR51, 52	EVNK4AA00B15	〃 100KΩ(B)	1	Ⓝ
VR70	EVNK4AA00B54	〃 50KΩ(B)	1	Ⓝ
VR90	EVJA2AT12A14	Variable Resistor 10KΩ(A)	1	Ⓝ
VR101, 102	EVNJ0AA00B14	Semi-fixed Variable Resistor 10KΩ(B)	2	Ⓝ
VR103, 104	EVNK0AA00B24	〃 20KΩ(B)	2	Ⓝ
VR301	EVNK0AA00B24	〃 20KΩ(B)	2	Ⓝ
VR303	EVNJ0AA00B23	〃 2KΩ(B)	1	Ⓝ
VR400	EVNJ0AA00B54	〃 50KΩ(B)	1	Ⓝ
VR401	EVNK0AA00B14	〃 10KΩ(B)	1	Ⓝ
VR501, 502	EVNJ0AA00B14	〃 10KΩ(B)	2	Ⓝ
VR503, 504	EVNJ0AA00B24	〃 20KΩ(B)	2	Ⓝ
VR601, 602	EVNK0AA00B13	〃 1KΩ(B)	2	Ⓝ
VR603, 604	EVNK0AA00B54	〃 50KΩ(B)	2	Ⓝ
		CAPACITORS		
C1, 2	ECKD1H821KB	Ceramic Capacitor 820pF	2	

RS-686DS-D

Ref. No.	Part No.	Part Name & Description	Pcs/Set	Remarks
C3, 4	ECKD1H221KB	Ceramic Capacitor 220pF	2	
C7, 8	ECQM05683MZ	Mylar Capacitor 0.068μF	2	
C9, 10	ECQS1821JZ	Styrol Capacitor 820pF	2	
C30	ECEA6Z220	Electrolytic Capacitor 220μF	1	
C40	ECEB16V1000	〃 1000μF	1	
C41	ECEA35V10	〃 10μF	1	
C42	ECEA16V10	〃 10μF	1	
C44	ECSZ10EF100Q	Tantalum Capacitor 100μF	1	
C45	ECEB25V33	Electrolytic Capacitor 33μF	1	
C47, 48	ECSZ25EF1Q	Tantalum Capacitor 1μF	2	
C50	ECQM05333MZ	Mylar Capacitor 0.033μF	1	
C51, 52	ECQS1472KZ	Styrol Capacitor 4700pF	2	
C53	ECQM05104MZ	Mylar Capacitor 0.1μF	1	
C54	ECQF4273JZH	Film Capacitor 0.027μF	1	
C55, 56	ECKD1H471KB	Ceramic Capacitor 470pF	2	
C60	ECSZ10EF10Q	Tantalum Capacitor 10μF	1	
C61	ECSZ16EFR47Q	〃 0.47μF	1	
C62	ECEA10Z100	Electrolytic Capacitor 100μF	1	
C70, 71	ECSZ10EF10Q	Tantalum Capacitor 10μF	2	
C72	ECEA10V100	Electrolytic Capacitor 100μF	1	
C73	ECEA16V10	〃 10μF	1	
C91	ECSZ10EF47Q	Tantalum Capacitor 47μF	1	
C92	ECQM05223MZ	Mylar Capacitor 0.022μF	1	
C93	QCSZ3EF47	Tantalum Capacitor 47μF	1	
C94	ECCD1H470KC	Ceramic Capacitor 47pF	1	
C95	ECSZ25EF2R2	Tantalum Capacitor 2.2μF	1	
C96	ECSZ6EF150Q	〃 150μF	1	
C97	ECQM05223MZ	Mylar Capacitor 0.022μF	1	
C101, 102	ECSZ25AF1E	Tantalum Capacitor 1μF	2	
C103, 104	ECKD1H181KB	Ceramic Capacitor 180pF	2	
C105, 106	ECCD1H470KC	〃 47pF	2	
C107, 108	ECEA25Z10	Electrolytic Capacitor 10μF	2	
C109, 110	ECCD1H470KC	Ceramic Capacitor 47pF	2	
C111, 112	ECEA50M1	Electrolytic Capacitor 1μF	1	
C113, 114	ECEA25V33	〃 33μF	2	

Ref. No.	Part No.	Part Name & Description		Pcs/Set	Remarks
C115, 116	ECSZ25AF1E	Tantalum Capacitor	1μF	2	
C117, 118	ECQM05333MZ	Mylar Capacitor	0.033μF	2	
C121, 122	ECQM05123KZ	〃	0.012μF	2	
C123, 124	ECEA35V10	Electrolytic Capacitor	10μF	2	
C126	ECEA35V33	〃	33μF	1	
C201, 202	ECEA50M4R7	〃	4.7μF	2	
C203	ECCD1H820KC	Ceramic Capacitor	82pF	1	
C204	ECCD1H121K	〃	120pF	1	
C205, 206	ECEA50M4R7	Electrolytic Capacitor	4.7μF	2	
C207, 208	ECEA10V100	〃	100μF	2	
C209, 210	ECCD1H101K	Ceramic Capacitor	100pF	2	
C211, 212	ECEA10V100	Electrolytic Capacitor	100μF	2	
C213, 214	ECQM05103MZ	Mylar Capacitor	0.01μF	2	
C301	ECEA50M4R7	Electrolytic Capacitor	4.7μF	1	
C303, 305	ECEA16V10	〃	10μF	2	
C307	ECEA50M1	〃	1μF	1	
C309	ECQM05273KZ	Mylar Capacitor	0.027μF	1	
C311	ECEA16V10	Electrolytic Capacitor	10μF	1	
C313	ECEA50MR1	〃	0.1μF	1	
C315	ECEA16V47	〃	47μF	1	
C317	ECEA16V10	〃	10μF	1	
C319	ECEA50ZR1	〃	0.1μF	1	
C321	ECEA16V10	〃	10μF	1	
C323	ECEA50ZR1	〃	0.1μF	1	
C325	ECEA50ZR33	〃	0.33μF	1	
C327	ECEA50ZR1	〃	0.1μF	1	
C329	ECCD1H220K	Ceramic Capacitor	22pF	1	
C400	ECEA50M4R7	Electrolytic Capacitor	4.7μF	1	
C401	ECKD1H152MD	Ceramic Capacitor	1500pF	1	
C402	ECEA16V33	Electrolytic Capacitor	33μF	1	
C403	ECEA50M4R7	〃	4.7μF	1	
C404	ECCD1H101K	Ceramic Capacitor	100pF	1	
C405	ECEA10V100	Electrolytic Capacitor	100μF	1	
C406	ECEA16V10	〃	10μF	1	
C407	ECKD1H221KB	Ceramic Capacitor	220pF	1	

RS-686DS-D

Ref. No.	Part No.	Part Name & Description		Pcs/Set	Remarks
C408	ECQM05103KZ	Mylar Capacitor	0.01μF	1	
C409	ECQM05473MZ	〃	0.047μF	1	
C410	ECQM05332KZ	〃	0.033μF	1	
C411	ECEA16V10	Electrolytic Capacitor	10μF	1	
C413	ECCD1H101K	Ceramic Capacitor	100pF	1	
C414	ECKD1H221KB	〃	220pF	1	
C501, 502	ECEA50ZR68	Electrolytic Capacitor	0.68μF	2	
C503, 504	ECEA16V10	〃	10μF	2	
C505, 506	ECQM05563KZ	Mylar Capacitor	0.056μF	2	
C507, 508	ECQM05393KZ	〃	0.039μF	2	
C509, 510	ECQM05563KZ	〃	0.056μF	2	
C511, 512	ECEA16V10	Electrolytic Capacitor	10μF	2	
C513, 514	ECKD1H471KB	Ceramic Capacitor	470pF	2	
C515, 516	ECQM05153KZ	Mylar Capacitor	0.015μF	2	
C601, 602	ECEA35V4R7	Electrolytic Capacitor	4.7μF	2	
C603, 604	ECEA16V10	〃	10μF	2	
C605, 606	ECEA16V33	〃	33μF	2	
C607, 608	ECQM05682KZ	Mylar Capacitor	0.0068μF	2	
C609, 610	ECQM05562KZ	〃	0.0056μF	2	
C611, 612	ECEA16V33	Electrolytic Capacitor	33μF	2	
C613, 614	ECEA50Z2R2	〃	2.2μF	2	
C615	ECEA16V33	〃	33μF	1	
C617, 618	ECQM05183KZ	Mylar Capacitor	0.018μF	2	
C1001, 1002	ECCD1H101K	Ceramic Capacitor	100pF	2	
C1003, 1004	ECKD1H223ZF	〃	0.022μF	2	
C1005	ECSZ10EF47Q	Tantalum Capacitor	47μF	1	
		TRANSISTORS			
Tr30, 31	2SA564	Transistor		2	COMMON
Tr32, 33	2SC1384	〃		2	〃
Tr40	2SC1318	〃		1	〃
Tr51, 52	2SC1384	〃		2	〃
Tr60, 61	2SC828	〃		2	〃
Tr62	2SC1383	〃		1	〃
Tr70	2SC828	〃		1	〃

Ref. No.	Part No.	Part Name & Description	Pcs/Set	Remarks
Tr71	2SA564	Transistor	1	COMMON
Tr72	2SC1684	〃	1	〃
Tr73, 74, 75	2SC828	〃	3	〃
Tr80, 81	2SC828	〃	2	〃
Tr101, 102	2SA721	〃	2	〃
Tr103, 104, 105, 106				
	2SC1327	〃	4	〃
Tr201, 202, 203, 204				
	2SC828	〃	4	〃
Tr205, 206	2SC1327	〃	2	〃
Tr301	2SK30AD	FET	1	〃
Tr400	2SA721	Transistor	1	〃
Tr501, 502, 503, 504, 601, 602, 603, 604				
	2SC828	〃	8	〃
		INTEGRATED CIRCUITS		
IC90	QVIM51181L	Integrated Circuit	1	Ⓝ
IC201, 202	QVITA7122AP	〃	2	RS-640USD
IC301	EHM321A06	〃	1	Ⓝ
IC303	EHM322A07	〃	1	Ⓝ
IC400	QVITA7122AP	〃	1	RS-640USD
IC601, 602	TA7140PC	〃	2	Ⓝ
		DIODES		
D1	SIB0102	Silicon Diode	1	RS-615USD
D2	LN25D	LED	1	RS-462SD
D10	MA1051LF	Silicon Diode	1	Ⓝ
D11	OA90MLF	Germanium Diode	1	RS-671USD
D30	MA150	Silicon Diode	1	〃
D31	MA26W	〃	1	〃
D32	MA150	〃	1	〃
D34	MA1051FV	〃	1	Ⓝ
D35	MV1	〃	1	Ⓝ
D60, 61	MA150	〃	2	RS-671USD
D62	MA26W	〃	1	〃

Ref. No.	Part No.	Part Name & Description	Pcs/Set	Remarks
D63	MA150	Silicon Diode	1	RS-671USD
D64	MA26W	〃	1	〃
D65	LN45D	LED	1	Ⓝ
D70	MV1	Silicon Diode	1	Ⓝ
D71	MA150	〃	1	RS-671USD
D73	MV1	〃	1	Ⓝ
D74	OA91	Germanium Diode	1	RS-671USD
D301, 303	MA26W	Silicon Diode	2	〃
D305	OA90M	Germanium Diode	1	〃
D307	OA91	〃	1	〃
D601, 602	OA90M	〃	2	〃
D603	MA1068FV	Silicon Diode	1	RS-462SD
PUT30, 70	N13T1	PUT	2	RS-671USD
		TRANSFORMER		
T50	QLB0158	Oscillator Transformer	1	RS-671USD
		COILS		
L1, 2	QLH2020	Bias Trap Coil	2	Ⓝ
L40, 41	QLQX2421X	Choke Coil	2	RS-615USD
LPF1, 2	QLM9Z001W	MPX Filter	2	RS-676USD
L501, 502, 503, 504				
	QLQX0331W	Peaking Coil	4	RS-671USD
		SWITCHES		
S1, 2	ESD1248	Slide Switch (Record/Playback Selector)	2	Ⓝ
S3, 4, 5, 6, 7, 8, 9, 11				
	QSWY801A	Push Switch (MIC, EQ, Filter, Input, Limiter, Dolby, Monitor, Bias)	8	Ⓝ
S10, 12	QSM0063	Push Switch (Meter, Battery)	2	Ⓝ
S13, 14	QSB0195	Leaf Switch	2	Ⓝ
S15	QSB0194	〃	1	Ⓝ
S16	QSB0195	〃	1	Ⓝ
S17	QSB0194	〃	1	Ⓝ
S18	QSE0003	Reed Switch	1	RS-671USD

Ref. No.	Part No.	Part Name & Description	Pcs/Set	Remarks
		ELECTRICAL PARTS		
E1	WY445AH	Record/Playback Head	1	Ⓝ
E2	QWY0130X	Monitor Head	1	Ⓝ
E3	QWY2118	Erase Head	1	RS-671USD
E4	EAS5P03S	Speaker	1	Ⓝ
E5	QSL4008RNM	Level Meter-L	1	Ⓝ
E6	QSL4009RNM	Level Meter-R	1	Ⓝ
E7	QEJ5005S	Jack Board Assembly	1	Ⓝ
E8	QJA0227	Microphone Jack	2	RS-263AUSD
E9	QJA0253H	Headphone Jack	1	Ⓝ
E10	QJA0154	Monitor Jack	1	RQ-544SD
E11	QJA0139HP	DC IN Jack	1	Ⓝ
E12	QEQ1392	DC-DC Converter	1	Ⓝ
E13	XAMQ30S200	Pilot Lamp	1	RS-676USD
E14	QNQ1070	Headphone Jack Nut	1	RS-600USD
E15	QNQ1033	Microphone Jack Nut	2	Ⓝ
E16	QNQ1004	VR Holding Nut	2	RQ-542SD
E17	QWQ2002	VR Holding Washer	2	RS-9900US
E18	QJS0793J	18 Pin Socket	1	Ⓝ
E19	QJS0781JN	15 Pin Socket	1	RS-9900US
E20	QJS0792J	12 Pin Socket	3	Ⓝ
E21	QJS0791J	9 Pin Socket	3	Ⓝ
E22	QJS0784JN	3 Pin Socket	1	Ⓝ
E23	QJP1906JO	18 Pin Plug	1	Ⓝ
E24	QJP1905JO	15 Pin Plug	1	RS-9900US
E25	QJP1904JO	12 Pin Plug	3	〃
E26	QJP1903JO	9 Pin Plug	3	〃
E27	QJP1908JO	3 Pin Plug	1	RS-600USD
E28	QJT1042	Contact	18	〃
E29	QYT0432	Volume Knob	1	Ⓝ
E30	QKJ0188	LED Holder	2	Ⓝ
E31	QMA3023	Speaker Holding Angle	1	Ⓝ
E32	QMA3020A	Volume Angle-A	1	Ⓝ
E33	QMA3021	Volume Angle-B	1	Ⓝ

RS-686DS-D

Ref. No.	Part No.	Part Name & Description	Pcs/Set	Remarks
E34	QMA3022	Switch Angle	1	Ⓝ
E35	QMA3024	Jack Angle	1	Ⓝ
E36	QMA3008	Side Angle	1	Ⓝ
E37	XSN2+8	Screw ⊕2×8	4	COMMON
E38	QBP1736	Meter Holding Spring	2	Ⓝ
E39	QMF1890	P.C.B. Holding Plate	1	Ⓝ
E40	QBK1254	Insulater Plate	1	Ⓝ
E41	QBK1249	〃	3	Ⓝ
E42	QTS1393A	Microphone Shield Plate	1	Ⓝ
E43	QBJ3149	Jack Washer	2	Ⓝ
E44	QYQ0270	Speaker Net Assembly	1	Ⓝ
		CABINET PARTS		
G1	QYM0440	Top Case Assembly	1	Ⓝ
G2	QYF0273	Cassette Lid Assembly	1	Ⓝ
G3	QYP0677	Front Panel Assembly	1	Ⓝ
G3-1	QGG0091	Push Button Guide	1	Ⓝ
G3-2	QBC1244	Stop Rod Spring	2	Ⓝ
G3-3	QGO1325	Meter Light Button	1	Ⓝ
G3-4	QGO1326	Battery Check Button	1	Ⓝ
G3-5	QGG0090	Lever Guide	1	Ⓝ
G3-6	XSN26+6	Screw ⊕2.6×6	12	COMMON
G3-7	XWA26B	Spring Washer	12	〃
G4	QYM0389	Bottom Case Assembly	1	Ⓝ
G5	QYD1019	Battery Case Assembly	1	Ⓝ
G5-1	QJB0004	Battery Spring	2	RQ-309DSD
G5-2	QJB0047	Battery Terminal	2	〃
G6	QYF0272	Battery Lid Assembly	1	Ⓝ
G6-1	QMA3017	Lid Holding Metal-A	1	Ⓝ
G6-2	QMA3018A	Lid Holding Metal-B	1	Ⓝ
G6-3	QGK2689	Lid Lock Knob	1	Ⓝ
G6-4	QBW2018	Washer	1	COMMON
G6-5	XSN2+3BV	Screw ⊕2×3	4	〃
G6-6	XWG2	Flat Washer	4	〃
G6-7	XQS2+3FZ	Screw ⊕2×3	2	〃

Ref. No.	Part No.	Part Name & Description	Pcs/Set	Remarks
G7	QKJ0174	Jack Cover-L	1	Ⓝ
G8	QKJ0175	Jack Cover-R	1	Ⓝ
G9	QGO1323	Stop Button	1	Ⓝ
G10	QXB0467	Eject Button	1	Ⓝ
G11	QYT0433	Lever Knob Assembly	1	Ⓝ
G12	QXB0459	Push Button	8	Ⓝ
G13	QYT0430	Volume Knob-A Assembly	1	Ⓝ
G14	QYT0431	Volume Knob-B Assembly	2	Ⓝ
G15	XSN26+6BV	Screw ⊕2.6×6	10	COMMON
G16	XSN26+8BV	Screw ⊕2.6×8	2	〃
G17	XSN26+25BV	Screw ⊕2.6×25	1	〃
G18	QHQ1260	Screw	1	Ⓝ
G19	QHQ1259	Screw	2	Ⓝ
G20	XWG26	Flat Washer	4	COMMON
G21	QNQ1004	Nut	1	RS-9900US
G22	QBH0043	Washer	1	Ⓝ
G23	QBP1763	Plate Spring	2	Ⓝ
G24	XSN26+8	Screw ⊕2.6×8	3	COMMON
G25	QKC1086	Hinge	1	Ⓝ
G26	QYC0185	Cassette Cover Assembly	1	Ⓝ
G27	QBT1785M	Idler Spring	1	Ⓝ
G28	XSN2+6BV	Screw ⊕2×6	3	COMMON
		ACCESSORIES		
A1	QFT6TCJNTBFZ	Cassette Tape	1	RS-615USD
A2	RP023A	Connection Cord	2	COMMON
A3	QYH0073A	Shoulder Belt	1	Ⓝ
A4	RP997XD	AC Adaptor	1	Ⓝ
A5	QQT2133	Instruction Book	1	Ⓝ
		PACKINGS		
P1	QPN3574	Inside Carton	1	Ⓝ
P2	QPA0273	Inner Cushion-L	1	Ⓝ
P3	QPA0274	Inner Cushion-R	1	Ⓝ
P4	QPS0279	Accessory Spacer	1	Ⓝ

RS-686DS-D

Ref. No.	Part No.	Part Name & Description	Pcs/Set	Remarks
P5	QPA0327	Spacer-C	1	Ⓝ
P6	QPS0283	Spacer-D	1	Ⓝ
P7	XZB30X36A05	Poly Bag	1	Ⓝ